Polk County Aviation Authority Meeting

Thursday, October 10, 2024
5:00 PM
Ankeny Regional Airport - Corporate/Terminal Hangar Building
3700 SE Convenience Blvd, Ankeny, Iowa

INSTRUCTIONS TO JOIN ELECTRONIC MEETING:

Please join using this link:
https://zoom.us/j/98294550961?pwd=MzdjTERQR1Y1SVNWOGhxWFd1b2FRUT09

Or dial: +13126266799 Meeting ID: 982 9455 0961 Passcode: 5678

A. ROLL CALL

B. APPROVAL OF AGENDA

1. Consider motion to approve and accept the October 10, 2024 agenda without amendment.

C. PUBLIC FORUM

1. Resident of Southeast Ankeny

D. FBO REPORTS

- Fuel Report
- Inspection Report
- Hangar tenant waiting list report
- Tenant concerns and response report

1. FBO Report & Waiting List

E. FINANCE / BUDGET REPORTS

F. CONSENT AGENDA ITEMS

CA - 1. Consider motion to approve the September 5, 2024 minutes.

CA - 2. Consider motion to adopt **RESOLUTION** approving the lease agreements with the individuals and/or organizations detailed on the attached list.

CA - 3. Consider motion to approve Payment #23 in the amount of $5,667.73 to McClure Engineering Company for services that include General On-Call Engineering Services.

CA - 4. Consider motion to approve Payment #2 in the amount of $16,995.55 to McClure Engineering Company for Extend Runway 18: ADIP/Aeronautical Survey, Airspace Analysis, and Data.

CA - 5. Consider motion to approve Payment #13 in the amount of $500.00 to McClure Engineering Company for Site Work & Vertical Infrastructure – Construction Management, Administration & Observation Service for the North Property Line Box Hangars.

CA - 6. Consider motion to approve Payment #7 in the amount of $11,895.57 to McClure Engineering Company for Taxiway D Apron and Access Roadway Paving, Construction Management, Admin and Observation Services – Phase 4.

CA - 7. Consider motion to approve Payment #6 in the amount of $774.00 to McClure Engineering Company for the Construction of Monument signs.

CA - 8. Consider motion to approve Payment #10 in the amount of $25,704.35 to McClure Engineering Company for services that includes Design & Bidding to Reconstruct Runway 18/36.

CA - 9. Consider motion to approve payment in the amount of $3,800.00 to Foth Infrastructure & Environment for IFE for Runway 18 Extension Design.

CA - 10. Consider motion to approve Bills and Transfer of Necessary Funds in the amount of $173,315.14.

CA - 11. Consider motion to approve the October 2024 Financial Reports.

- **APPROVAL OF CONSENT AGENDA ITEMS**

1. Consent Agenda Items CA-1 through CA-11.

   Consider motion to approve the recommendations for Consent Agenda Items CA-1 through CA-11.

G. REMOVED CONSENT AGENDA ITEMS:

H. OLD BUSINESS

I. NEW BUSINESS

1. Consider motion to adopt **RESOLUTION** accepting two Iowa DOT Grant Agreements for the partial funding of the North Property Line Box Hangars - Phase 2 Project at the Ankeny Regional Airport.

2. Consider motion to adopt **RESOLUTION** authorizing the execution of Task Order

07 for the design and bidding services with McClure Engineering for the North Property Line Box Hangars - Phase 2 Project.

3. Consider motion to adopt **RESOLUTION** authorizing the execution of a Land Lease Agreement with the Iowa Department of Administrative Services for the purpose of the construction of a Department of Public Services aircraft hangar at the Ankeny Regional Airport.

4. Consider motion to approve the construction plans for the Casey's Service Company Hangar on Phase 4 of the Taxiway D Hangar Development at the Ankeny Regional Airport.

5. Consider motion to approve the construction plans for the Rick's Landing Hangar on Phase 1 of the Taxiway D Hangar Development at the Ankeny Regional Airport.

6. Consider motion to approve public officials liability insurance with Indian Harbor Insurance Company for the policy year 09/20/24 - 09/19/25 and authorize revised premium payment in the amount of $3,396.00.

J. REPORTS

1. **Engineering Report**

   a. Phase 4 Taxiway D Project - Final Walk-thru Inspection

   b. Construction Update: Construct Monument Signs Project

   c. Project Update: Runway 18/36 Reconstruction and Extension Design/Coordination

2. **Staff Report**

   a. Consider assuming the Gate Maintenance Services by Controlled Access

   b. Runway 4/22 Possible Pavement Dip Correction

   c. AMCG Management Agreement Review - Update

   d. Bipartisan Infrastructure Law (BIL) Funding - Grant Application Status

   e. Additional Emergency Patching - Runway Intersection

3. **Legal Counsel Report**

   a. Discussion and direction on 2025 Farm Leases

4. **Board Report**

5. **Chair Report**

K. ADJOURNMENT

FBO REPORT October 10th, 2024

FUEL SALES

08/26 - 09/25	2024 Gallons		2023 Gallons	Last Month
100LL	15,185.9		11,189.5	16,527.7
JET-A	39,267.0		33,060.0	34,573.0
Total Gallons	54,452.9		44,249.5	51,100.7
54,452.9	x $.09/gallon=	$ 4,900.76		

Self-Serve 100LL fuel sales: 4,732.1 gallons equaling 31% of total sales.

T-HANGARS

ACCOUNTS RECIEVABLE: Nothing to report.

LEASES: Ken Ashley has moved from T Hangar E-08 into N-02. Tom Keilty has moved from the waiting list into T Hangar E-08.

INSURANCE RENEWALS: Nothing to report.

WAITING LIST: There are 79 people on the list which is up 2 from last month. 29 people on the list do not currently have an airplane or live out of state and plan to move back to the area.

VIOLATIONS: Nothing to report.

REPAIRS: The LED light in T Hangar A-08 and garage space C-NW have been replaced.

MISC: Nothing to report.

AIRFIELD

LIGHTING: 18 light bulbs were replaced on runway 04/22 and taxiways D & E.

MOWING: Nothing to report.

SNOW REMOVAL: Nothing to report.

WILDLIFE: Nothing to report.

MISC: Nothing to report.

Waiting List

(Note on Garage restriction: Per Amy Beattie: No hangar = no car storage. If they have a hangar we would not prohibit car storage for use coming and going from airport)

31 people do not have a plane to put in a hangar or live out of state but may return to Iowa.

Pos	Date Added	Name	Plane	Phone	E-Mail	Notes	Passes
T HANGAR							
1	12/6/2018	Derek Meyer	Looking	515-240-1077	meyer.derek3@gmail.com	11/5/21 Dave K - e-mailed Derek asking if he is still interested and what type of plane he has. 11/12/21 no plane, would like to stay on the list. 05/05/23 Dave K emailed Derek to see if he was still interested in being on the list and that if his name comes up and he doesn't have a plane the hangar will be offered to the next person in line. 05/08/23 Derek emailed back asking to see the lease to make sure he can comply with it. He did not indicate whether or not he has acquired a plane. 05/09/23 Dave K notified Derek that he is next on the list. Dave & Derek had a phone conversation and I explained that typically there is no subleasing to a friend. He will decide what to do when a hangar becomes available. 05/11/23 Derek emailed back and won't have a plane until next year, he would like to remain on the list. 04/09/24 Dave K emailed Derek to see if he's ready for a hangar, we have one that unexpectedly came open. Derek emailed back and will pass this time. The hangar did not become available so I did not increase the pass counter. 07/30/24 Dave K sent an email that we will have a hangar open up in September and if he is interested in it. He said he would pass at this time.	2
2	7/17/2019	Jeff Davis	Looking	515-444-7673	jeffreypaulhomes@gmail.com	11/5/21 Dave K talked to Jeff, he'd like to stay on the list as he may buy a plane in a year. 05/08/23 Dave K emailed Jeff to see if he was still interested in being on the list and that if his name comes up and he doesn't have a plane the hangar will be offered to the next person in line. 05/11/23 Jeff called Dave and said he doesn't have a plane yet but would like to remain on the list. 04/09/24 Dave K emailed Jeff to see if he's ready for a hangar provided the person(s) ahead of him pass, we have one that unexpectedly came open. 04/18/24: Dave K email Jeff again as I have not heard back from him. I told him if I don't get a response from him I am going to skip him if a hangar becomes available. Jeff emailed back stating he will need to pass this time. The hangar did not become available so I did not increase the pass counter. 07/30/24 Dave K sent an email that we will have a hangar open up in September and if he is interested in it. 08/06/24 Dave K never heard back from Jeff so I'm moving on to the next person.	2
3	8/28/2019	Dan Stull	Looking	515-447-2339	dan@Stullcompanies.com	05/08/23 Dave K emailed Dan to see if he was still interested in being on the list and that if his name comes up and he doesn't have a plane the hangar will be offered to the next person in line. 05/10/23 Dan e-mailed back and said he doesn’t have a plane and may not have one by late summer, he would like to stay on the list. 04/09/24 Dave K emailed Dan to see if he's ready for a hangar provided the person(s) ahead of him pass, we have one that unexpectedly came open. 04/18/24: Dave K spoke with Dan today, he is going to pass. The hangar did not become available so I did not increase the pass counter. 07/30/24 Dave K sent an email that we will have a hangar open up in September and if he is interested in it. 08/06/24 Dave K never heard back from Dan so I'm moving on to the next person.	2

4	10/31/2019	Mike Callison	Cessna 172 N6922X	515-505-9111	mlcallison8@gmail.com	11/5/21 Dave K - Called Mike, he wants to stay on the list. 08/07/23 Mike said they have a 172 that will go into the hangar once it becomes available. They plane was donated and needs assembled. 04/09/24 Dave K emailed Mike to see if he's ready for a hangar provided the person(s) ahead of him pass, we have one that unexpectedly came open. 04/18/24: Dave K email Mike again as I have not heard back from him. I told him if I don't get a response from him I am going to skip him if a hangar becomes available. Mike emailed back with some questions about retaining his current position if he passes, I answered them. Mike emaild back and said he would pass this time. The hangar did not become available so I did not increase the pass counter. 07/30/24 Dave K sent an email that we will have a hangar open up in September and if he is interested in it. 08/06/24 Dave K never heard back from Mike so I'm moving on to the next person.	2
5	4/22/2020	Kurt Wendl	Looking	515-883-0566	kurtwendl@gmail.com	05/28/20 Found this request in wrong file. 11/02/21 Dave K texted with Kurt, he will be moving back to DSM in 3 - 4 years asked be moved to bottom of the list. 05/16/23 Dave spoke with Kurt today, he will be back in Iowa in July 2025. 04/09/24 Dave K emailed Kurt to see if he's ready for a hangar provided the person(s) ahead of him pass, we have one that unexpectedly came open. Kurt said he won't be back here for another year so he will have to pass. The hangar did not become available so I did not increase the pass counter. 07/30/24 Dave K sent an email that we will have a hangar open up in September and if he is interested in it. 08/08/24 Dave K never heard back from Kurt so I'm moving on to the next person.	2
6	5/28/2020	Nick Wynen	Bonanza	515-965-9568	nixkiks1@gmail.com	11/5/21 Dave K - Nick wants to remain on the waiting list.	
7	6/10/2020	Kayode Fajingbesi	Cessna 182	713-825-8262	Kay.Faji@yahoo.com	11/5/21 Dave K - emailed asking if he is still interested. 11/5/21 He emailed back that he would like to stay on the list.	
8	6/10/2020	Darby Bauer	Looking	515-306-9465	darby.bauer@gmail.com	11/5/21 Dave K - emailed asking if he is still interested. He emailed back that he would like to stay on the list. He is going to buy a second plane for cross country travel.	
9	8/3/2020	John Paszek	N615BJ	619-876-8164	paszekj@gmail.com	11/5/21 Dave K - emailed asking if he is still interested. Emailed back asking to remain on the list. May be moving to Denver in a year but unsure if that will be long term.	
10	9/2/2020	Nate Booth	Looking	515-802-2385	nate@otis8.com	11/5/21 Dave K texted, he would like to remain on the list.	
11	10/9/2020	Brooks Woolson	looking	515-559-6875	brooks.woolson@gmail.com	11/6/21 Dave K talked to him, he'd like to stay on the list.	
12	11/2/2017	Andy Rowland	Cessna	515-210-2452	andy@arowland.com	10/20/20 Passed on the available hangar - Dan Stull. 11/5/21 Dave K - emailed asking if he is still interested. He wants to remain on the list.	
13	11/5/2020	James Stogdill	Looking for Bonanza	515-240-7700	revjames.stog@gmail.com	12/07/21 - Dave K He called checking on his place on the list. 11/05/21 He e-mailed back on but never got added. I added him.	
14	11/12/2020	Nate Schneider	SR22 N223TF	319-383-3206	nathan_schneider@msn.com	11/5/21 Dave K - emailed asking if he is still interested. He wants to remain on the list.	
15	11/20/2020	Todd Lenig	Looking	515-664-2451	tlenig@icloud.com	11/5/21 Dave K - emailed asking if he is still interested. Wrote back to keep him on the list.	
16	4/5/2021	Jacob Greenfield	Building Sonex B	(319)-573-9783	greenfj17@gmail.com	11/5/21 Dave K - emailed asking if he is still interested. He wants to remain on the list.	
17	5/1/2021	Mike Hannam	Cessna Cardinal N2829X	515-556-7290	bigyellowjeep@msn.com	11/5/21 Dave K - emailed asking if he is still interested. He emailed back that he wants to stay on the list.	
18	5/14/2021	Clay Wright	V Tail Bonanza	515-669-8969	claytonwright01@gmail.com	11/5/21 Dave K - emailed asking if he is still interested. 11/22/21 Dave k texted to see if he wanted to remain on the list. He texted back and would like to remain on the list.	
19	5/24/2021	Matt Ver Steeg	1946 Ercoupe 415-C	515-333-8787	mattversteeg@gmail.com	11/5/21 Dave K - emailed asking if he is still interested. He emailed back, he wants to stay on the list. He also has a Titan Tornado II SS.	
20	6/8/2021	Paul Peterson	C180	651-336-2041	fr8tdog@juno.com	11/5/21 Dave K - emailed asking if he is still interested. He emailed back, he wants to stay on the list.	
21	8/12/2021	David Hogan	RV6	949-410-5823	rv709rw@gmail.com	Called in, I told him to email me. Have not received email - Dan 11/22/21 Called Walter Aviation and spoke with Gretchen, she knows David. I asked her to pass my number along and for him to call me or I'll have to remove him from the list. 11/24/21 He replied back to stay on the list.	

22	8/16/2021	Todd Anderson	N714AT	515-419-9142	todd@4andersons.com	11/5/21 Dave K - emailed asking if he is still interested.
23	8/23/2021	Kurt Wegge	LongEZ - N85LD	224-456-6092	123kwegge@gmail.com	11/5/21 Dave K - emailed asking if he is still interested. He emailed back, he wants to stay on the list.
24	8/31/2021	Sam Marcsisak	looking	515-208-7946	Sam@midiowaelectric.com	11/5/21 Dave K - emailed asking if he is still interested. 11/08/21 emailed back asking to stay on list.
25	8/31/2021	Chad Larson	PA32	515-202-2394	CDLChadmark@hotmail.com	Dave K - Chad sent Dave an e-mail per Jeff Wagsness. Dave e-mailed Chad back letting him know he's been added to the list. 11/5/21 Dave K - emailed asking if he is still interested. He emailed back to stay on the list.
26	9/7/2021	Larry Plathe	looking - Malibu	515-508-1290	plathelarry@mchsi.com	11/5/21 Dave K - emailed asking if he is still interested.
27	10/4/2021	Kolbe Stenoien	Looking C172 or A36	515-201-6542	stenoien2@gmail.com	11/5/21 Dave K - emailed asking if he is still interested. He emailed back that he wants to remain on the list.
28	8/6/2018	Ben Sweet	Looking	515-231-9062	ben.sweet_84@yahoo.com	11/3/21 Dave K - e-mailed Ben asking if he is still interested and what type of plane he has. He e-mailed right back asking to be moved to the bottom on the list.
29	11/29/2021	Nile Ackerman	RV-6	515-848-8075	nile.ackerman@gmail.com	11/29/21 Dave K - Request received. Previous T Hangar customer, lives in Colorado now. Will be moving back to Iowa.
30	1/11/2022	Tom Drew	Looking	515-490-4555	tdrew@drewlawfirm.com	01/11/22 - Dan Stull e-mailed Dave K asking to add Tom to the list. I sent Tom an e-mail that he has been added and his position on the list.
31	1/26/2022	Solar Flying Club	Looking	515-240-5272	jvimage@msn.com	01/26/22 - Dave K - Jeneanne e-mailed me asking to have Solar added to the list, I sent her their position on the list.
32	1/28/2022	Paul Reinke	RANS S21 - Building	515-201-4762	preinke@energycontroltechnologies.com	01/28/22 - Dave K - Paul e-mailed asking to be put on the list.
33	2/3/2022	Dalton Headlee	Looking	515-975-3314	dalton.headlee@gmail.com	02/03/22 - Dave K - Dalton e-mailed asking to be put on the list.
34	3/3/2022	Ken King	Looking	515-350-6201	kennethscottking@gmail.com	03/03/22 - Dave K - Ken e-mailed asking to be put on the list.
35	3/16/2022	Adam Obrecht	Bonanza A36 N8261K	515-778-8964	aobrecht@aowealthadvisory.com	03/16/22 - Dave K - Adam e-mailed asking to be put on the list.
36	4/21/2022	Austin Lanphier	Looking	641-295-3058	lanphierproduce@gmail.com	04/21/22 - Dave K - Austin e-mailed asking to be put on the list.
37	4/28/2022	Marc Broer	Stinson 108	515-249-8511	skycoupe318@gmail.com	04/28/22 - Dave K - Marc e-mailed asking to be put on the list.
38	5/31/2022	John Kolbo	Bellanca Viking	402-681-0976	johnkolbo18@gmail.com	05/31/22 - Dave K - John e-mailed asking to be put on the list.
39	6/2/2022	Bill Bergren	Cessna 182	515-669-6331	bbergren1728@gmail.com	06/02/22 - Dave K - Bill e-mailed asking to be put on the list.
40	6/17/2022	Jeremy Sikes	Cessna 182	505-934-3244	flyabq@yahoo.com	06/17/22 - Dave K - Jeremy e-mailed asking to be put on the list.
41	6/17/2022	Chris Foster	Cherokee 160	515-505-5612	fosterlimo@aol.com	06/21/22 - Dave K - Chris e-mailed asking to be put on the list.
42	7/10/2022	Harold Petro	Cessna 140	515-402-1558	harleyguydsm@gmail.com	07/10/22 - Dave K - Harold e-mailed asking to be put on the list.
43	7/11/2022	Greg Jensen	Cherokee 235	515-291-3909	gregj@jcorpdesignbuild.com	07/11/22 - Dave K - Greg e-mailed asking to be put on the list.
44	7/19/2022	Raymond Kingery	Looking	515-450-7467	Raymond.Kingery@usss.dhs.gov	07/19/22 - Dave K - Raymond e-mailed asking to be put on the list. Won't be in the area until 2023/2024.
45	8/26/2022	Shaune Osborne	Looking	515-473-8903	leigh.osborne@mchsi.com	08/26/22 - Dave K - Shaune e-mailed asking to be put on the list.
46	9/6/2022	Nichole Needs	Cessna 150	515-518-7356	nichole.triplett@gmail.com	09/06/22 - Dave K - Nichole e-mailed asking to be put on the list.
47	9/7/2022	Gravis Alger	Cirrus SR22	515-650-1620	gravis.alger@gmail.com	09/07/22 - Dave K - Gravis e-mailed asking to be put on the list.
48	9/7/2022	David Switzer	Lancair Legacy. N84V	772-332-2016	davefromcoulee@comcast.net	09/07/22 - Dave K - David e-mailed asking to be put on the list.
49	2/14/2023	Dave Seybert	Piper Cherokee	515-313-5585	daves@exec1aviation.com	02/14/23 - Dave K - Dave e-mailed asking to be put on the list.
50	2/14/2023	Aaron Hopkins	Cessna 172	515-732-4133	aahopkins@gmail.com	02/14/23 - Dave K - Aaron e-mailed asking to be put on the list.
51	3/7/2023	Gabe Roth	Citabria	515-201-8569	groth9421@gmail.com	03/07/23 - Gabe e-mailed asking to be put on the list.
52	3/14/2023	Bob Folkestad	Citabria	515-314-2424	bobf@creativewerksinc.com	03/14/23 - Bob e-mailed asking to be put on the list.
53	4/6/2023	Jeff Vosberg	PA28-235 Pathfinder	515-351-0066	vosbergj@hotmail.com	04/06/23 - Jeff e-mailed asking to be put on the list.
54	4/11/2023	Joe Kirby	Cirrus SR22	319-270-9631	jokirby@bellevue.edu	04/11/23 - Joe e-mailed asking to be put on the list.

55	10/24/2018	Todd Slezak	Arrow III	319-210-3793	slezcorp@gmail.com	11/3/21 Dave K - email sent asking if he was still interested in a hangar. 11/5/21 Dave K sent a text asking about his interest. He texted back to stay on list. 09/22/22 Dave K e-mailed that he was next up and to verify that he wants to remain on the list. 05/05/23 Dave K emailed Todd letting him know he is next up and to verify he still wants a hangar. 05/08/23 Dave K texted Todd to see if he saw my email, he would like moved to the bottom of the list as he has a partnership in Ames. I asked him to send that back to me as an e-mail. 05/13/23 Todd emailed and said to move him to the back of the list.
56	6/12/2023	Corbin McClavy	Looking	515-612-5125	cbinmc@gmail.com	06/12/23 - Corbin e-mailed asking to be put on the list.
57	1/10/2020	Andy Maysent	Looking	515-231-1422	amaysent@mecresults.com	11/05/21 Dave K - texted asking if he is still interested. 11/06/21 texted back to remain on list. 06/13/23 Dave K - Andy emailed that he won't be buying a plane for 2 - 3 years and that I could move him to the bottom of the list.
58	12/23/2019	Ben Welch	Lancair, Robinson, C172	217-497-4992	bwelch54@msn.com	11/05/21 Dave K - emailed asking if he is still interested. He emailed back that he wants to stay on the list. 06/13/23 Dave K e-mailed Ben to see if he wanted to take a hangar when one becomes available. 06/22/23 Dave K notified Ben that J-05 is available starting July 1st. Ben e-mailed back asking questions about the hangar. 06/23/23 Dave K sent an e-mail answering the questions. 06/24/23 Dave K sent a follow-up e-mail to see if he has any additional questions. 06/25/23 Ben e-mailed back and will pass this time, they will be in NV for the next three years as his son and wife attend medical school. I told him I'd keep him on the list and move him to the bottom. Dave K found Ben was on the list two other times, those have been removed.
59	7/11/2023	Ryan White	Cessna	515-707-0124	ryanwhite72@gmail.com	07/11/23 Dave K received an e-mail from Ryan to be added to the list.
60	8/10/2023	Ryan Brosz	Building RV-14	641-420-2700	rbrosz@gmail.com	08/10/23 Dave K received an e-mail from Ryan to be added to the list.
61	9/20/2023	Patrick Murphy	Commander 114 N4722W	518-817-6847	22wcarpediem@gmail.com	09/20/23 Dave K received an e-mail from Patrick to be added to the list.
62	6/7/2017	Mike Hubbell	Phoenix motor glider	515-988-3646	mchubbell@gmail.com	11/5/21 Dave K - e-mailed Mike asking if he is still interested and what type of plane he has. 11/7/21 Dave K texted Mike the e-mail that was sent. He emailed back and would like to stay on the list. He has an SR22 and it thinking about adding a smaller plane, a car and a project in this hangar. 05/09/23 Dave K emailed Mike to let him know he was number four on the list and if he still wanted a hangar. Mike emailed back, he sold his SR22, the motor glider will be here in July or August. I let him know if he's not ready to move in when his name comes up we move to the next person on the list. 05/22/23 Dave K e-mailed Mike to let him know a hangar will be available July 1st. 06/26/23 Dave K e-mailed Mike that he is next up on the list and I should have a hangar available at the end of July. I told him if he has a firm delivery date on his plane we may be able to do something. 08/04/23 Dave K - I emailed Mike to see if he has an ETA on his plane as I may have a hangar opening soon. 08/07/23 Mike called (Kappy spoke to him) and said the plane has been shipped and will be here in 30 days, he can produce a BOL if needed. Dave emailed Mike that a BOL would be fine once a hangar come open and that I have one that should open this month. 08/28/23 Dave K emailed Mike to see is his plane was close to arriving and that the hangar he will be offered should open in the next 30 days or so. 09/25/23 Mike called Dave - He was expecting to take delivery in August or September but the delivery has been delayed until November. The plane is on the water or in customs waiting to be released, that was unclear to me. Mike has sent me the BOL so it seems legit, I don't doubt anything he is saying. He wanted to know if that was going to be an issue for him getting a hangar since he won't have the plane to put into it immediately. The plane will spend 4 - 5 months in Arizona (he goes there in the winter time). He is looking to purchase a second plane so eventually something will be here all year round. I've asked Paul Moritz for his thoughts. 10/26/23 Dave K called Mike to let him know I've got a hangar for him, his plane is not here yet, he's now being told November 9th. He now doesn't want to take the hangar because the plane won't be here for half the year, it'll be in Arizona with him and he doesn't feel right about that. He asked to be moved to the bottom of the list.

63	11/15/2023	Rocky Kinney	Cessna 150 N1713Q	515-867-7625	roc.kinney@gmail.com	11/15/23 Dave K received an e-mail from Rocky to be added to the list, I emailed his position back to him.
64	12/5/2023	Evan Reiman	Cirrus N906CT	515-218-0802	evanjreiman@gmail.com	12/5/23 Kappy R received an call from Evan she e-mailed the information to Dave K.
65	12/10/2023	Jesse Tischer	Cessna 205 N205HN	701-306-1920	jessegtischer@gmail.com	12/10/23 Dave K received an e-mail from Jesse to be added to the list, I emailed his position back to him.
66	12/20/2023	Samuel Rankin	SR22 N119WZ	515-321-4199	sam@etchoutdoor.com	12/20/23 Dave K received an e-mail from Sam to be added to the list, I emailed his position back to him. 08/12/24 Dave K received an email from Sam with his aircraft information.
67	2/8/2024	Kent Lehs	Cessna 182 N6859M	515-669-2969	kentlehs@gmail.com	02/08/24 Dave K received an e-mail from Kent to be added to the list, I emailed his position back to him.
68	2/12/2024	Scott Moritz	Looking	515-344-2083	smoritz@clearairinc.com	02/08/24 Dave K received an e-mail from Scott to be added to the list, I emailed his position back to him.
69	3/21/2024	Jacob Anderson	Citabria	714-330-6642	jagraphix01@gmail.com	03/21/24 Dave K received an e-mail from Jacob to be added to the list, I emailed his position back to him.
70	4/10/2024	Christian Fitzgerald	Zenith 601XL-B N423DS	505-508-9808	cdfitzgerald95@gmail.com	04/10/24 Dave K received an e-mail from Christian asking to be added to the list, I emailed his position back to him.
71	4/14/2024	Jordon Elwell	Looking	515-240-4698	jelwell@midwestfoodsllc.com	04/14/24 Dave K received an e-mail from Jordan asking to be added to the list, I emailed his position back to him.
72	4/18/2024	Curt Nelson	Piper Archer 180 N2501R	515-729-4227	CNELSON75@msn.com	04/18/24 Dave K received an e-mail from Curt asking to be added to the list, I emailed his position back to him. 08/28/24 Dave K received an e-mail from Curt with the info on the plane he now owns, he was looking when added to the list.
73	3/21/2016	CAP - Darrel Mullins	Looking / possible CAP plane	515-490-6779	darrelmullins@me.com	05/05/21 Dan - passes 11/05/21 Dave K - emailed asking if he is still interested. Wants to stay on list. 10/26/23 Dave K called Darrel to see if he is intersted, I left a voice mail and sent a text. 10/27/23 Dave K spoke with Darrel, he has a glider in Ames so moving that to IKV does not make sense. He is going to check with CAP leadership to see if they would like to move one of their planes here. When Darrel first got onto the list it was for him or CAP. 04/09/24 Dave K emailed Darrel to see if he's ready for a hangar provided the person(s) ahead of him pass, we have one that unexpectedly came open. 04/18/24: Dave K email Darrel again as I have not heard back from him. I told him if I don't get a response from him I am going to skip him if a hangar becomes available. Darrel emailed back and says CAP doesn't need the hangar so he'd like to be moved to the bottom of the list.
74	4/21/2024	Steven Chester	Bonanza N8570M	720-301-9197	stevengchester@hotmail.com	04/21/24 Dave K received an e-mail from Steven asking to be added to the list, I emailed his position back to him.
75	4/25/2024	Barb Spencer	Looking	515-664-7901	mrandmrskiwi@gmail.com	04/25/24 Dave K received an e-mail from Barb asking to be added to the list, I emailed her position back to her.
76	6/21/2024	Steve McClatchey	C172A N7689T	712-390-3607	smcclatchey51@gmail.com	06/21/24 Kappy spoke with Steve and she sent me his information.
77	8/23/2024	Arron Weeks	Lancair 235 N32TG	561-213-7614	aaron@weeksgrp.com	08/23/24 Dave K received a call from Aaron asking to be added to the list.
78	10/1/2024	Kirk Eno	Looking	319-321-6202	kirkeno@gmail.com	10/01/24 Dave K received a call from Kirk asking to be added to the list.
79	10/1/2024	Cody Christensen	Looking	515-291-7557	codyc8043@gmail.com	10/01/24 Dave K received a call from Cody asking to be added to the list.

SOUTH HANGAR

1	2/17/2020	Jeff Brandt	D8 - C172	515-321-0155	brandtjd67@gmail.com	06/22/23 Dave K e-mailed Jeff to see if he's interested in the B-04 if it becomes available. 06/23/23 Jeff emailed back wanting to know who was going to fix the insulation and leaking roof. I told him I brought the issue to the airport manager and it's now out of my hands. I asked him to let me know if he wants it or not, if he doesn't I'll move to the next person on the list. 06/23/23 Jeff has decided he'll take the hangar when it becomes available. 08/28/23 Brant spoke to Dave, he's not quite ready to move to a South facing hangar, after speaking with Dan Stull we saw no reason we couldn't swap Jeff and Scott Wallace who is currently number 2). 11/10/23 Dave K: I sent Jeff an e-mail telling him there may be a South facing hangar opening January 1st. 11/15/23 Dave K: I sent Jeff another e-mail stating if I don't hear back I will move to the next person. 08/23/24 Dave K sent an email with his position on the list and if he'd like to remain on it. He emailed back stating he'd like to remain on the list.	1
2	11/11/2020	Ken Ashley	E8 - RV7	515-782-2803	malibuf16@gmail.com	06/22/23 Dave K e-mailed to see if he's still interested in a South facing hangar when on becomes available. 06/22/23 Ken emailed back and said he's ready to move when one becomes available. 11/15/23 Dave K: I sent Ken an email that he is number 2 on the list and would he take it if it becomes available. 08/23/24 Dave K sent an email with his position on the list and if he'd like to remain on it. He emailed back stating he'd like to remain on the list.	
3	1/27/2022	Scott Biller	E6 - Dakota	515-240-0858	Scott.Biller1@gmail.com	06/22/23 Dave K e-mailed to see if he's still interested in a South facing hangar when on becomes available. 06/22/23 Scott emailed back that he's still interested. 11/15/23 Dave K sent an email asking if he wants to stay on the South facing list along with his position. He responded that he would like to reamin on the list. 08/23/24 Dave K sent an email with his position on the list and if he'd like to remain on it.	
4	2/15/2016	Paul Reinke	E4 - Mooney 201	515-201-4762	preinke@energycontroltechnologies.com	Paul is building a plane that will eventually go in the hangar. 06/22/23 Dave K e-mailed to see if he's still interested in a South facing hangar when on becomes available. 11/15/23 Dave K sent an email asking if he wants to stay on the South facing list along with his position. 08/23/24 Dave K sent an email with his position on the list and if he'd like to remain on it.	
5	12/27/2016	Dave Kalwishky	E10 - C182	515-314-7060	dave@kalwishky.com	12/15 Dianna: Declined A-2 and asked to stay on the list, but move to the bottom. 06/28/23 Dave K: passed, asked to stay on list. 06/22/23 Dave K asked himself if he wanted to stay on the South facing list and he said yes. 11/15/23 Dave K asked himself if he wanted to stay on the South facing list and he said yes. 08/23/24 Dave K asked himself if he wanted to stay on the South facing list and he said yes.	
6	1/30/2017	Tony Palmer	A9 - C182	515-681-0446	onfinalflying@icloud.com	Dave K: contacted Tony to see if he's interested, he will get back to me tomorrow. Tony declined the hangar and asked to stay on the list. 06/22/23 Dave K e-mailed to see if he's still interested in a South facing hangar when on becomes available. 11/15/23 Dave K sent an email asking if he wants to stay on the South facing list along with his position. 08/23/24 Dave K sent an email with his position on the list and if he'd like to remain on it.	
7	7/11/2023	Ryan White	A10 - RV6	515-707-0124	ryanwhite72@gmail.com	07/11/23 Dave K received an e-mail from Ryan to be added to the list. 11/15/23 Dave K sent an email asking if he wants to stay on the South facing list along with his position. He respond that he would like to stay on the list. 08/23/24 Dave K sent an email with his position on the list and if he'd like to remain on it. He emailed back stating he'd like to remain on the list.	

GARAGE SPACE

1	10/24/2018	Todd Slezak		319-210-3793	toddslezak@aol.com	11/10/23 Dave K: I sent Todd an e-mail letting him know he is next in line and I will have a garage opening up before the end of December. 11/15/23 Dave K: I sent Todd another e-mail stating if I don't hear back from him I will move to the next person on the list. 12/07/23 Dave K: I have not heard back from Todd so I offered the garage space to Bob.	1
2	8/18/2019	Dan Stull		515-447-2339	dan@stullcompanies.com	11/15/23 Dave K: I sent Dan an e-mail letting him know he is number two on the list. I have a garage opening up before the end of December and if the guy ahead of him passes he can have it if he's still interested. Dan got back to me saying he'd like to stay on the list.	
3	10/28/2020	Marc Broer			skycoupe318@gmail.com	Only wants B-SE - Will Pass on all others.	
4	10/28/2020	Ken Anderson				Only wants G-NW for door size - Will Pass on all others.	
5	11/17/2020	Nic Rupiper		515-564-9715	nicholasrupiper@yahoo.com	11/15/23 Dave K: I sent Nic an e-mail with his current poistion and asking if he'd like to remain on the list. Nic got back to me saying he'd like to stay on the list.	
6	4/6/2020	Jacob Greenfield	Building Aircraft	319-573-9783	greenfj17@gmail.com	12/07/23 Dave K: I sent Jacob an e-mail with his current poistion and asking if he'd like to remain on the list. 12/29/23 Dave K: Jacob emailed back that he would like to remain on the list.	
7	7/7/2020	Todd Freeland		515-208-0819	todd@innovative-me.com	11/15/23 Dave K: I sent Todd an e-mail with his current poistion and asking if he'd like to remain on the list. He responded that he would like to reamin on the list.	
8	2/3/2022	Dalton Headlee		515-975-3314	dalton.headlee@gmail.com	11/15/23 Dave K: I sent Dalton an e-mail with his current poistion and asking if he'd like to remain on the list. He responded back that he'd like to remain on the list. I sent a follow up email that says you must have a hangar or plane on the field to have a garage space and that I would keep him on the list as it moves very slowly, garages seldom become available. There has only been one in the three years I've been here. He responed back that he has a PA-12 project that would go in the garage until his name comes up on the hangar. I told him that will work.	
9	5/15/2024	Quinn Fairchild	Store aircraft supplies	515-422-7966	fairchild.quinn@gmail.com	05/15/24: Quinn emailed asking to be put on the list. He will use the space for 1) store/erect my aviation supplies/maps, to 2) create an aviation study space (weather dependent), and in the event that I 3) join a aircraft partnership or win one of the 6 raffles (for single-engine aircraft) to 4) have an initial space for aircraft equipment for the aircraft I may win.	

COMMUNITY HANGAR						
1	7/26/2023	Mike Hannam	Cessna Cardinal N2829X	515-556-7290	bigyellowjeep@msn.com	07/23/23 Mike emailed Dave K asking to be put onto the community hangar list. 04/30/24 Dave K sent an e-mail asking if he is still interested in space if it were to become available. Nate emailed back that he would lile to remain on the list, I let him know what the pricing is. 08/12/204 Dave sent an e-mail asking if he's still interested in space as I may have an opening in a month.
2	8/12/2024	Sam Rankin	SR22 N118WZ	515-635-5296	sam@etchoutdoor.com	08/11/24 Sam emailed Dave looking for infomration, I asked if he'd like to be added to the list.

BOX HANGAR - The numbers do not represent any kind of order. They exist so we know how many pilots are interested.						
1	11/9/2023	Bill Gardner	RV10 / Super Cub	515-240-2524	wggardner@att.net	11/09/23: Dave K - After the board meeting Bill asked to be out into this list. 06/12/24: Dave K sent an email to see if he's still interested in staying on the list. 06/26/24: Bill emailed back asking to remain on the list.
2	1/24/2024	Chad Larson	Saratoga	515-202-2394	CDLChadmark@hotmail.com	01/24/24 Dave K: Chad called and asked to be put on the list. 06/11/24: Dave K sent an email to see if he's still interested in staying on the list. He'd like to remain on the list.
3	4/30/2024	Kent Lehs	Cessna 182 N6859M	515-669-2969	kentlehs@gmail.com	04/30/24: Dave K - Kent was asking about these hangars today, I gave him the information that I have and said I can add him to the list of interested people. 06/11/24: Dave K sent an email to see if he's still interested in staying on the list. He'd like to remain on the list.

4	6/1/2024	Greg Jensen	Cherokee 235	515-291-3909	greg.jensen@calibercompany.com	06/01/24: Dave K - Greg sent an email asking to be added to the list. 06/11/24: Dave K sent an email to see if he's still interested in staying on the list. He'd like to remain on the list.
5	6/11/2024	Nicholas Ashton	Cirrus Jet	515-444-8769	nicholas@energeoingenuity.com	06/11/24 Dave K: The plane is on order, he is looking for space either in our community hangar or a box hangar. 09/05/24 Dave K: Nicholas called and will not have a plane for 2 - 3 months, he understands that we will need to move on to someone else. I will keep him on the list.
6	6/11/2024	Kyler Gifford	Looking for a Cessna 172	515-783-0064	kylergifford@gmail.com	06/11/24 Dave K: Kyler texted me and asked to be put on this list.
7	7/9/2024	Mitchel Sellers	Currently has Cirrus Looking at TBM700C2 or M600	515-707-3629	msellers@iowacomputergurus.com	07/09/24 Dave K: Mitch emailed asking to be put on the list. 09/06/24 Dave K spoke to Mitch a few weeks ago and he said he was going to pass at this time.
8	7/9/2024	Mike Hannam	Cardinal N2829X	515-556-7290	bigyellowjeep@msn.com	07/09/24 Dave K: Mike emailed asking to be put on the list.
9	8/23/2024	David Switzer	Lancair Legacy N84V	772-332-2016	dfcdfc@comcast.net	08/23/24 Dave K: David called asking about the hangars, I let him know more would be built next year. He'd like to find a few people with smaller planes to go in with him to lease the hangar.

MINUTES OF THE POLK COUNTY AVIATION AUTHORITY (PCAA)
Thursday, September 5, 2024 - 5:00 PM
Ankeny Regional Airport, 3700 SE Convenience Blvd., Ankeny, Iowa

---

Chairman Jeff Wangsness called the meeting to order at 5:00 PM. Board Members William Gardner and Greg Johnson were in attendance. Todd Ashby joined the meeting electronically and left the meeting at 5:44 PM. Dr. Paul Novak arrived at 5:45 PM. Austin Moran (McClure), Dave Kalwishky (Exec 1), Airport Board Manager Paul Moritz, City Attorney Amy Beattie and Recording Secretary Diane Klemme were also present.

Approval of Agenda

Board Member Gardner moved, second by Johnson, to approve the agenda without amendment. Ayes: 4.

Public Hearing – PH 2024-05

1. Chairman Wangsness announced that this is the time and place for a public hearing on the matter of authorizing the execution of a land lease agreement with Iowa Department of Administrative Services for purposes of the construction of an aircraft hangar. Notice of this hearing was published in the Des Moines Register on the 23rd day of August, 2024. Chairman Wangsness then asked for any public comment regarding the proposed lease, and there were none. Board Member Johnson moved to close public hearing 2024-05, Gardner seconded. Ayes: 4

2. **RESOLUTION 2024-35** authorizing the execution of a land lease agreement with Iowa Department of Administrative Services for purposes of the construction of an aircraft hangar. No action was taken.

Public Hearing – PH 2024-06

1. Chairman Wangsness announced that this is the time and place for a public hearing on the matter of authorizing the execution of a land lease agreement with Rick's Landing, LLC for purposes of the construction of an aircraft hangar. Notice of this hearing was published in the Des Moines Register on the 23rd day of August, 2024. Chairman Wangsness then asked for any public comment regarding the proposed lease, and there were none. Board Member Johnson moved to close public hearing 2024-06, Gardner seconded. Ayes: 4

2. **RESOLUTION 2024-36** authorizing the execution of a land lease agreement with Rick's Landing, LLC for purposes of the construction of an aircraft hangar. Board Member Johnson moved to close public hearing 2024-06, Gardner seconded. Ayes: 4

FBO Report

Dave Kalwishky reviewed his FBO Report with the Board.

Finance / Budget Report

Gardner reported on the 9/5/24 listing of bills.

Consent Agenda Items

1. Approval of August 8, 2024 minutes.
2. Payment #4 to 818, LLC for the fabrication and installation of the new airport sign in the amount of $437.50.
3. Payment #12 to McClure Engineering Company for Site Work & Vertical Infrastructure for the North Property Line Box Hangars in the amount of $655.62.
4. Payment #9 to McClure Engineering Company for services that includes Design & Bidding for Runway 18/36 in the amount of $31,792.35.
5. Payment #6 to McClure Engineering Company for Taxiway D Apron and Access Roadway Paving, Construction Management – Phase 4 in the amount of $4,731.08.
6. Payment #5 to McClure Engineering Company for Construction of Monument Signs in the amount of $2,618.00.
7. Payment #1 to McClure Engineering Company for Extend Runway 18: ADIP/Aeronautical Survey, Airspace Analysis and Data in the amount of $6,180.20.
8. Payment #22 to McClure Engineering Company for services that include General On-Call Engineering in the amount of $3,137.79.
9. Approval of Bills and Transfer of Necessary Funds, $143,616.63.
10. Approval of September 2024 Financial Reports.

Approval of Consent Agenda Items

Board Member Johnson moved, second by Gardner, to approve Consent Agenda Items CA-1 through CA-10. Ayes: Johnson, Gardner, Ashby, Wangsness.

New Business

1. Motion to approve property insurance with Cincinnati Insurance Company for the policy year 9/20/24 – 9/19/25 and authorize premium payment in the amount of $51,202.00. Gardner moved, second by Johnson. Ayes: Gardner, Johnson, Ashby, Wangsness.
2. Motion to approve public officials' liability insurance with Indian Harbor Insurance Company for the policy year 9/20/24 – 9/19/25 and authorize premium payment in the amount of $2,878.00. Gardner moved, second by Johnson. Ayes: Gardner, Johnson, Ashby, Wangsness.
3. **RESOLUTION 2024-37** authorizing the Chairperson to execute the construction contract for the Construct Monument Signs Project at the Ankeny Regional Airport. Gardner moved, second by Johnson. Ayes: Gardner, Johnson, Ashby, Wangsness.
4. **RESOLUTION 2024-38** authorizing the execution of Task Order No. 6B with McClure Engineering Company for the Runway 18 Extension – Design and Bidding Services. Gardner moved, second by Johnson. Ayes: Gardner, Johnson, Ashby, Wangsness.
5. **RESOLUTION 2024-39** authorizing a Box Hangar Lease Agreement with Craig Ellingson. Johnson moved, second by Gardner. Ayes: Johnson, Gardner, Ashby, Wangsness.
6. **RESOLUTION 2024-40** authorizing a Box Hangar Lease Agreement with Nicholas Ashton. No action was taken.

Reports

A. Engineering Report – Moran/Moritz
    a. Project Update – Taxiway D Phase 4 Apron and Access Roadway Construction.
    b. Project Update – Runway 18/36 Reconstruction and Extension Design/Coordination.
    c. Runway 18/36 Reconstruction and Extension – Status of ILS Relocation.
B. Staff Report - Moritz

a. Aviation Management Consulting Group Financial Analysis - Update.
b. Runway 4 PAPI – Failed Control Boards.
c. Exterior Columns on Terminal Building South Entry: Needed Repairs.
d. Additional Emergency Patching within the Runway Intersection.
e. Taxiway D Concrete Channel Cleanout by Dave's Dozing – Extra Work.
f. Possible Leasing of Storage Rooms – North Box Hangars Phase 1.

C. Legal Counsel Report
D. Board Report
E. Chair Report

Executive Session

1. At 5:45 p.m. Gardner moved, second by Johnson, to go into Executive Session pursuant to the provisions of Iowa Code Section 21.5(1)(c) "to discuss strategy with counsel in matters that are presently in litigation or where litigation is imminent where its disclosure would be likely to prejudice or disadvantage the position of the governmental body in that litigation". Ayes: Gardner, Johnson, Novak, Wangsness. The Board adjourned the Executive Session and reconvened to regular session at 6:02 p.m. Moved by Johnson, seconded by Novak, to Enter into an Engagement Letter with Attorney, Jason Palmer with Lamson Dugan & Murray LLP in an event further services are needed. Ayes: Johnson, Novak, Gardner, Wangsness.

Adjournment

The meeting was adjourned at 6:10 p.m.

Attest: _____ Signed: _____
Diane Klemme, Recording Secretary Jeff Wangsness Chairperson

Published in the Des Moines Register on the 13th day of September, 2024.

RESOLUTION 2024-

A RESOLUTION APPROVING THE LEASE AGREEMENTS WITH THE INDIVIDUALS AND/OR ORGANIZATIONS.

WHEREAS, the Polk County Aviation Authority (PCAA) leases aircraft hangar and garage space for the convenience of its patrons; and

WHEREAS, the payments received for the lease of hangars and garages will be used to maintain the hangar facilities; and

WHEREAS, Dwight Axtell executed a twelve-month lease for hangar B-09 with a termination date of December 31, 2024; and

> **WHEREAS,** the lease is not in default under the lease and is requesting that the termination date of the lease be changed to August 31, 2024; and

WHEREAS, Todd Freeland executed a four-month lease for hangar B-09 with a termination date of December 31, 2024.

WHEREAS, Tim Williams executed a four-month lease for a tie-down with termination date of December 31, 2024.

WHEREAS, Craig Ellingson executed a four-month lease for box hangar N-01 with a termination date of December 31, 2024.

WHEREAS, Ken Ashley, Fox 3 Holdings, LLC executed a three-month lease for box hangar N-02 with a termination date of December 31, 2024.

WHEREAS, Ken Ashley, Fox 3 Holdings, LLC executed a twelve-month lease for hangar E-08 with a termination date of December 31, 2024; and

> **WHEREAS,** the lease is not in default under the lease and is requesting that the termination date of the lease be changed to September 30, 2024; and

WHEREAS, Thomas Kielty**,** Airborne Adventures, LLC executed a three-month lease for hangar E-08 with a termination date of December 31, 2024.

NOW, THEREFORE, BE IT RESOLVED, that the Polk County Aviation Authority approves the lease agreements with the individuals and/or organizations as indicated above

Dated at Ankeny, Iowa, this 10th day of October, 2024.

_____
Todd Ashby, Acting Chairperson

ATTEST:

_____
Diane Klemme, Recording Secretary

APPLICATION FOR PARTIAL PAYMENT OF CONTRACT

Ankeny Regional AIRPORT
Central Iowa's Business Connection

Project Title: General On-Call Engineering Services
Contractor: McClure Engineering Company
Address: 1360 NW 121st St, Suite A, Clive, IA 50325
Finance Budget Code: 644 ***Finance Project Code:*** N/A
Vendor Project or Invoice #: 2022001042-000 ***PO #*** N/A
Original Contract Date: October 6, 2022 ***Vendor #*** N/A

Date of Board Meeting 10-Oct-24 ` **PAYMENT REQUEST #** 23

PAYMENT PERIOD: From: 07/28/24 through: 08/31/24

Contract Summary

Original Contract Amount:	$ -		
Net change by Change Orders:	$ -		
Contract Amount to Date: (line 1 ± 2)		$66,444.72	
Total completed and stored to date:	$66,444.72		
Retainage: 0 % of Completed Work:	$ -		
Total Earned less Retainage:		$66,444.72	
Less previous applications for payment:		$60,776.99	
SUBTOTAL			$ 5,667.73
OTHER CHARGES (Please attach an itemized list)			$ -
CURRENT PAYMENT DUE			$ 5,667.73
Balance to finish, including retainage:		-	
Contract Time Remaining (If applicable)	N/A ##		

The undersigned Contractor certifies that to the best of the Contractor's knowledge, information and belief the work covered by this Application for Payment has been completed in accordance with the Contract Documents, that all the amounts have been paid by the Contractor for work for which previous Certificate(s) for Payment were issued and payments received from the Owner, and that current payment shown herein is now due.

Engineer/Consultant Approval: McClure Engineering Company
Firm Name

Signature Date 9/23/2024

PCAA Approval:

Signature Date

City of Ankeny Staff Approval:

Signature Date

Work completed:
-Site visit by Structural Engineer to review column issues; preparation of a memorandum proposing possible solutions and estimated costs
-Finalizing of plat / legal description for Casey's on Phase 4 area (began survey work on Phase 1 prior to switch to Phase 4)
-Preparation of plat / legal descriprtion for Phase 1 area
-Preparations (updates) of ATP applications for terminal elevator and entrance road / roundabout (including updating of cost estimates)

*Paul Moritz, cc:Jennifer Sease*
Email: *PMoritz@AnkenyIowa.gov; jsease@ankenyiowa.gov* *Phone:* *515-965-6420* *Fax:* *515-965-6416*

McCLURE™

1360 NW 121st Street
Clive, IA 50325

Paul Moritz
Polk County Aviation Authority
410 West First St
Ankeny, IA 50023

August 31, 2024
Project No: 2022001042-000
Invoice No: 23
Due Date: September 30, 2024

Project 2022001042-000 Ankeny Regional Airport - General On-Call Services

Professional Services from July 28, 2024 to August 31, 2024

Phase 163 General On-Call Services

	Hours	Rate	Amount	
Engineer I	.75	125.00	93.75	
Engineer V	1.00	285.00	285.00	
Professional Land Surveyor	9.50	180.00	1,710.00	
Project Manager II	7.00	205.00	1,435.00	
Project Manager III	6.50	230.00	1,495.00	
Intern	8.00	75.00	600.00	
Totals	32.75		5,618.75	
Total Labor				**5,618.75**

Reimbursable Expenses

Mileage		23.85	
Total Reimbursables		**23.85**	**23.85**

Mileage (.67/.50 p/mile)

25.13

Total this Phase **$5,667.73**

Total Due this Invoice **$5,667.73**

Outstanding Invoices

Number	Date	Balance
22	7/29/2024	3,137.79
Total		**3,137.79**

APPLICATION FOR PARTIAL PAYMENT OF CONTRACT

Ankeny Regional AIRPORT
Central Iowa's Business Connection

Project Title:	Ankeny Airport: Extend Runway 18: ADIP/Aeronautical Survey, Airspace Analysis, and Data
Contractor:	McClure Engineering Company
Address:	1360 NW 121st St, Suite A, Clive, IA 50325
Finance Budget Code:	644 ***Finance Project Code:*** N/A
Vendor Project or Invoice #:	2022001042-009 ***PO #*** N/A
Original Contract Date:	July 8, 2024 ***Vendor #*** N/A

Date of Board Meeting 10-Oct-24 **PAYMENT REQUEST #** 2

PAYMENT PERIOD: From: 07/28/24 through: 08/31/24

Contract Summary

Original Contract Amount:	$ 90,992.00		
Net change by Change Orders:	$ -		
Contract Amount to Date: (line 1 ± 2)		$ 90,992.00	
Total completed and stored to date:	$ 23,175.75		
Retainage: 0 % of Completed Work:	$ -		
Total Earned less Retainage:		$ 23,175.75	
Less previous applications for payment:		$ 6,180.20	
SUBTOTAL			$ 16,995.55
OTHER CHARGES (Please attach an itemized list)			$ -
CURRENT PAYMENT DUE			$ 16,995.55
Balance to finish, including retainage:		$ 67,816.25	
Contract Time Remaining (If applicable)	N/A ##		

The undersigned Contractor certifies that to the best of the Contractor's knowledge, information and belief the work covered by this Application for Payment has been completed in accordance with the Contract Documents, that all the amounts have been paid by the Contractor for work for which previous Certificate(s) for Payment were issued and payments received from the Owner, and that current payment shown herein is now due.

Engineer/Consultant Approval: McClure
Firm Name

Signature Date 9/23/2024

PCAA Approval:

Signature Date

City of Ankeny Staff Approval:

Signature Date

Work Completed: See attached Progress Report.

Submit to: *Paul Moritz, cc: Alexia Grgurich*

Email: *pmoritz@ankenyiowa.gov; AGrgurich@AnkenyIowa.gov* *Phone:* *515-965-6420* *Fax:* *515-965-6416*

Date Printed: 9/23/2024

1360 NW 121st Street
Clive, IA 50325

Paul Moritz
Polk County Aviation Authority
410 West First St
Ankeny, IA 50023

August 31, 2024
Project No: 2022001042-009
Invoice No: 2
Due Date: September 30, 2024

Project 2022001042-009 Ankeny: Extend Runway 18: ADIP/Aeronautical Survey, Airspace Analysis, and Data Collection Services

Professional Services from July 28, 2024 to August 31, 2024

Phase 1 Part I: Aeronautical Survey, Airspace Analysis, and Data Collection/Submission Services

Billing Phase	Fee	Percent Complete	Earned	Previous Billing	Current Billing
FAA Aeronautical Obstruction Survey	30,901.00	75.00	23,175.75	6,180.20	16,995.55
FAA ADIP Submission	6,374.00	0.00	0.00	0.00	0.00
Subconsultant-NV5	53,717.00	0.00	0.00	0.00	0.00
Total Fee	90,992.00		23,175.75	6,180.20	16,995.55

Total Fee **16,995.55**

Total this Phase **$16,995.55**

Total Due this Invoice **$16,995.55**

Outstanding Invoices

Number	Date	Balance
1	7/29/2024	6,180.20
Total		**6,180.20**

McCLURE™

PROGRESS REPORT

PROJECT #	**2022001042-009**
PROJECT	**ANKENY REGIONAL AIRPORT – EXTEND RUNWAY 18: ADIP/AERONAUTICAL SURVEY, AIRSPACE ANALYSIS AND DATA**
PRJ MNGR	**JAY PUDENZ, P.E., LEED AP**
CLIENT	**POLK COUNTY AVIATION AUTHORITY** **410 WEST 1ST STREET** **ANKENY, IOWA 50021**

Phone **515.965.6420**
Fax
Email: pmoritz@ankenyiowa.gov

REPORT BY **JAY PUDENZ, P.E., LEED AP**
Email: jpudenz@mcclurevision.com

REPORTING PERIOD **AUGUST 2024** NEXT REPORT **SEPTEMBER 2024**

SUMMARY OF WORK DONE LAST PERIOD

- ✓ Continued field work for on-site ground control survey in accordance with FAA/NGS Standards
- ✓ Validated PACS/SACS
- ✓ Obtained all necessary ground control photo control per Figure 8
- ✓ Established Runway End Monuments
- ✓ Documented runway end/threshold locations
- ✓ Determined/validated runway length and width
- ✓ Determined/validated and document position for NAVAIDs

FORECAST OF ACTIVITIES FOR NEXT PERIOD

- Prepare Sketches (Runway Ends, NAVAIDs)
- Submit items to the FAA / ADIP

VALUE ADDED SERVICES

- N/A

INPUT NEEDED

- N/A

Part I: Aeronautical Survey, Airspace, and Data Collection Submission Services

Phase A – FAA Aeronautical Obstruction Survey

Phase B – FAA Airport Data and Information Portal (ADIP) Submission

Phase C – Subconsultants-NV5

APPLICATION FOR PARTIAL PAYMENT OF CONTRACT

(Site Work and Vertical Infrastructure):

Project Title: Construction Management, Administration, and Observation
Contractor: McClure Engineering Company
Address: 1360 NW 121st St, Suite A, Clive, IA 50325
Finance Budget Code: 644 ***Finance Project Code:*** N/A
Vendor Project or Invoice #: 2022001042-002 ***PO #*** N/A
Original Contract Date: July 10, 2023 ***Vendor #*** N/A

Date of Board Meeting 10-Oct-24 **PAYMENT REQUEST #** 13

PAYMENT PERIOD: From: 07/28/24 through: 08/31/24

Contract Summary

Original Contract Amount:	$ 125,162.00		
Net change by Change Orders:	$ -		
Contract Amount to Date: (line 1 ± 2)		$ 125,162.00	
Total completed and stored to date:	$ 123,962.00		
Retainage: 0 % of Completed Work:	$ -		
Total Earned less Retainage:		$ 123,962.00	
Less previous applications for payment:		$ 123,462.00	
SUBTOTAL			$ 500.00
OTHER CHARGES (Please attach an itemized list)			$ -
CURRENT PAYMENT DUE			$ 500.00
Balance to finish, including retainage:		$ 1,200.00	
Contract Time Remaining (If applicable)	N/A ##		

The undersigned Contractor certifies that to the best of the Contractor's knowledge, information and belief the work covered by this Application for Payment has been completed in accordance with the Contract Documents, that all the amounts have been paid by the Contractor for work for which previous Certificate(s) for Payment were issued and payments received from the Owner, and that current payment shown herein is now due.

Engineer/Consultant Approval: McClure
Firm Name

Signature Date 9/23/2024

PCAA Approval:

Signature Date

City of Ankeny Staff Approval:

Signature Date

Work Completed: See attached Progress Report.

Submit to: Paul Moritz, cc: Alexia Grgurich
Email: pmoritz@ankenyiowa.gov; AGrgurich@AnkenyIowa.gov *Phone: 515-965-6420* *Fax: 515-965-6416*

Date Printed: 9/23/2024

Paul Moritz
Polk County Aviation Authority
410 West First St
Ankeny, IA 50023

August 31, 2024
Project No: 2022001042-002
Invoice No: 13
Due Date: September 30, 2024

Project 2022001042-002 Ankeny - North Property Line Box Hangars (Site Work and Vertical Infrastructure): Construction Management, Administration, and Observation Services

Professional Services from July 28, 2024 to August 31, 2024

Phase 1 Part IA: Construction Administration/Observation Services - AIP Services

Billing Phase	Fee	Percent Complete	Earned	Previous Billing	Current Billing
Fixed Fee	8,100.00	100.00	8,100.00	8,100.00	0.00
Total Fee	8,100.00		8,100.00	8,100.00	0.00

Total Fee **0.00**

Reimbursable Expenses

Meals	46.06	
Total Reimbursables	**46.06**	**46.06**

	Current	Prior	To-Date
Total Billings	46.06	63,209.00	63,255.06
Contract Limit (not-to-exceed)			63,209.00
Amount Adjusted this Period			**-46.06**

Total this Phase **0.00**

Phase 2 Part IB: Construction Administration/Observation Services - GAVI Services

Billing Phase	Fee	Percent Complete	Earned	Previous Billing	Current Billing
Fixed Fee	7,030.00	100.00	7,030.00	7,030.00	0.00
Total Fee	7,030.00		7,030.00	7,030.00	0.00

Total Fee **0.00**

	Current	Prior	To-Date
Total Billings	0.00	55,753.00	55,753.00
Contract Limit (not-to-exceed)			55,753.00

Total this Phase **0.00**

Phase 3 Part IB: Construction Administration/Observation Services - GAVI Services: Subconsultant

Consultants

Bluestone Engineering

8/12/2024	Bluestone Engineering	500.00	
	Total Consultants	**500.00**	**500.00**

	Current	Prior	To-Date
Total Billings	500.00	4,500.00	5,000.00
Contract Limit (not-to-exceed)			6,200.00
Contract Limit Remaining			1,200.00

Total this Phase	**$500.00**
Total Due this Invoice	**$500.00**

Outstanding Invoices

Number	Date	Balance
12	7/29/2024	655.62
Total		**655.62**

PROGRESS REPORT

PROJECT #	**2022001042-002**
PROJECT	**ANKENY REGIONAL AIRPORT – NORTH PROPERTY LINE BOX HANGARS (SITE WORK AND VERTICAL INFRASTRUCTURE): CONSTRUCTION MANAGEMENT, ADMINISTRATION, AND OBSERVATION SERVICES**
PRJ MNGR	**JAY PUDENZ, P.E., LEED AP**
CLIENT	**POLK COUNTY AVIATION AUTHORITY** **410 WEST 1ST STREET** **ANKENY, IOWA 50021**

Phone **515.965.6420**
Fax
Email: pmoritz@ankenyiowa.gov

REPORT BY **JAY PUDENZ, P.E., LEED AP**
Email: jpudenz@mcclurevision.com

REPORTING PERIOD **AUGUST 2024** NEXT REPORT **SEPTEMBER 2024**

SUMMARY OF WORK DONE LAST PERIOD

- ✓ Monitored final punchlist items
- ✓ Final invoice (paying out subs)

FORECAST OF ACTIVITIES FOR NEXT PERIOD

- N/A

VALUE ADDED SERVICES

-

INPUT NEEDED

- N/A

Part 1A: CA/Obs. Services-AIP Services

Construction Administration

Resident Project Representative

Construction Staking

Project Closeout

Project Management and Coordination

Part 1B: CA/Obs. Services- GAVI Services

Construction Administration

Resident Project Representative

Construction Staking

Project Closeout

Project Management and Coordination

Part 1B: CA/Obs. Services- GAVI Services - Subconsultant

Project Management and Coordination

APPLICATION FOR PARTIAL PAYMENT OF CONTRACT

Ankeny Regional AIRPORT
Central Iowa's Business Connection

Project Title:	Ankeny Airport - Taxiway D Apron and Access Roadway Paving – Phase 4: Construction Management, Admin, and Observation Services
Contractor:	McClure Engineering Company
Address:	1360 NW 121st St, Suite A, Clive, IA 50325
Finance Budget Code:	644 ***Finance Project Code:*** N/A
Vendor Project or Invoice #:	2022001042-005 ***PO #*** N/A
Original Contract Date:	February 8, 2024 ***Vendor #*** N/A

Date of Board Meeting 10-Oct-24 **PAYMENT REQUEST #** 7

PAYMENT PERIOD: From: 07/28/24 through: 08/31/24

Contract Summary

Original Contract Amount:	$ 79,730.00		
Net change by Change Orders:	$ -		
Contract Amount to Date: (line 1 ± 2)		$ 79,730.00	
Total completed and stored to date:	$ 61,551.10		
Retainage: 0 % of Completed Work:	$ -		
Total Earned less Retainage:		$ 61,551.10	
Less previous applications for payment:		$ 49,655.53	
SUBTOTAL			$ 11,895.57
OTHER CHARGES (Please attach an itemized list)			$ -
CURRENT PAYMENT DUE			$ 11,895.57
Balance to finish, including retainage:		$ 18,178.90	
Contract Time Remaining (If applicable)	N/A		

The undersigned Contractor certifies that to the best of the Contractor's knowledge, information and belief the work covered by this Application for Payment has been completed in accordance with the Contract Documents, that all the amounts have been paid by the Contractor for work for which previous Certificate(s) for Payment were issued and payments received from the Owner, and that current payment shown herein is now due.

Engineer/Consultant Approval: McClure
Firm Name

Signature 9/20/2024
Date

PCAA Approval:

Signature Date

City of Ankeny Staff Approval:

Signature Date

Work Completed: See attached Progress Report.

Submit to: *Paul Moritz, cc: Alexia Grgurich*

Email: *pmoritz@ankenyiowa.gov; AGrgurich@AnkenyIowa.gov* *Phone:* *515-965-6420* *Fax:* *515-965-6416*

Date Printed: 9/19/2024

McCLURE™

1360 NW 121st Street
Clive, IA 50325

Paul Moritz
Polk County Aviation Authority
410 West First St
Ankeny, IA 50023

August 31, 2024
Project No: 2022001042-005
Invoice No: 7
Due Date: September 30, 2024

Project 2022001042-005 Ankeny: Taxiway D Apron and Access Roadway Paving – Phase 4: Construction Management, Admin, and Observation Services

Professional Services from July 28, 2024 to August 31, 2024

Phase 600 Construction Administration

	Hours	Rate	Amount	
Project Manager I	6.00	185.00	1,110.00	
Project Manager II	17.50	205.00	3,587.50	
Project Manager III	2.50	230.00	575.00	
Project Coordinator	.25	135.00	33.75	
Totals	26.25		5,306.25	
Total Labor				**5,306.25**

Reimbursable Expenses

Meals			13.73	
Total Reimbursables			**13.73**	**13.73**

	Current	Prior	To-Date
Total Billings	5,319.98	10,862.76	16,182.74
Contract Limit (not-to-exceed)			19,570.00
Contract Limit Remaining			3,387.26

Total this Phase **$5,319.98**

Phase 650 Resident Project Representative

	Hours	Rate	Amount	
Project Manager I	1.00	185.00	185.00	
On Site Representative I	.50	115.00	57.50	
Project Manager II	12.50	205.00	2,562.50	
On-Site Representative II	15.50	155.00	2,402.50	
Totals	29.50		5,207.50	
Total Labor				**5,207.50**

Mileage (.67/.50 p/mile) **1.34**

	Current	Prior	To-Date
Total Billings	5,208.84	26,737.88	31,946.72
Contract Limit (not-to-exceed)			35,490.00
Contract Limit Remaining			3,543.28

Total this Phase **$5,208.84**

Phase 760 Construction Staking

	Hours	Rate	Amount	
Crew Chief	10.00	135.00	1,350.00	
Totals	10.00		1,350.00	
Total Labor				**1,350.00**

Mileage (.67/.50 p/mile) **16.75**

	Current	Prior	To-Date
Total Billings	1,366.75	4,937.60	6,304.35
Contract Limit (not-to-exceed)			12,610.00
Contract Limit Remaining			6,305.65

Total this Phase **$1,366.75**

Phase 800 Project Closeout

	Current	Prior	To-Date
Total Billings	0.00	0.00	0.00
Contract Limit (not-to-exceed)			3,780.00
Contract Limit Remaining			3,780.00

Total this Phase **0.00**

Phase 850 Project Management and Coordination

	Current	Prior	To-Date
Total Billings	0.00	7,117.29	7,117.29
Contract Limit (not-to-exceed)			8,280.00
Contract Limit Remaining			1,162.71

Total this Phase **0.00**

Total Due this Invoice **$11,895.57**

Outstanding Invoices

Number	Date	Balance
6	7/29/2024	4,731.08
Total		**4,731.08**

PROGRESS REPORT

PROJECT #	**2022001042-005**
PROJECT	**ANKENY REGIONAL AIRPORT – TAXIWAY D APRON AND ACCESS ROADYWAY PAVING – PHASE 4 - CONSTRUCTION MANAGEMENT, ADMIN, AND OBSERVATION SERVICES**
PRJ MNGR	**DAVE L. JOENS, P.E.**
CLIENT	**POLK COUNTY AVIATION AUTHORITY** **410 WEST 1ST STREET** **ANKENY, IOWA 50021**
Phone	**515.965.6420**
Fax	
Email:	pmoritz@ankenyiowa.gov

REPORT BY **DAVE L. JOENS, P.E.**
Email: djoens@mcclurevision.com

REPORTING PERIOD **AUGUST 2024** NEXT REPORT **SEPTEMBER 2024**

SUMMARY OF WORK DONE LAST PERIOD

- ✓ Continued Project Management & Coordination
- ✓ Continued Construction
- ✓ Continued RPR Services
- ✓ Completed Lighting & Electrical
- ✓ Completed Erosion Control

Phase 600 – Construction Administration

Phase 650 – Resident Project Representative

Phase 760 – Construction Staking

Phase 800 – Project Closeout

Phase 850 – Project Management and Coordination

FORECAST OF ACTIVITIES FOR NEXT PERIOD

- Final Walkthrough
- Project Closeout

VALUE ADDED SERVICES

- N/A

INPUT NEEDED

- N/A

APPLICATION FOR PARTIAL PAYMENT OF CONTRACT

Ankeny Regional AIRPORT
Central Iowa's Business Connection

Project Title: Ankeny: Construct Monument Signs
Contractor: McClure Engineering Company
Address: 1360 NW 121st St, Suite A, Clive, IA 50325
Finance Budget Code: 644 ***Finance Project Code:*** N/A
Vendor Project or Invoice #: 2022001042-010 ***PO #*** N/A
Original Contract Date: March 7, 2024 ***Vendor #*** N/A

Date of Board Meeting 10-Oct-24 **PAYMENT REQUEST #** 6
PAYMENT PERIOD: From: 07/28/24 through: 08/31/24

Contract Summary

Original Contract Amount:	$ 23,590.00		
Net change by Change Orders:	$ -		
Contract Amount to Date: (line 1 ± 2)		$ 23,590.00	
Total completed and stored to date:	$ 19,391.50		
Retainage: 0 % of Completed Work:	$ -		
Total Earned less Retainage:		$ 19,391.50	
Less previous applications for payment:		$ 18,617.50	
SUBTOTAL			$ 774.00
OTHER CHARGES (Please attach an itemized list)			$ -
CURRENT PAYMENT DUE			$ 774.00
Balance to finish, including retainage:		$ 4,198.50	
Contract Time Remaining (If applicable)	N/A ##		

The undersigned Contractor certifies that to the best of the Contractor's knowledge, information and belief the work covered by this Application for Payment has been completed in accordance with the Contract Documents, that all the amounts have been paid by the Contractor for work for which previous Certificate(s) for Payment were issued and payments received from the Owner, and that current payment shown herein is now due.

Engineer/Consultant Approval: McClure
Firm Name

Signature Date 9/23/2024

PCAA Approval:

Signature Date

City of Ankeny Staff Approval:

Signature Date

Work Completed: See attached Progress Report.

Submit to: Paul Moritz, cc: Alexia Grgurich
Email: pmoritz@ankenyiowa.gov; AGrgurich@AnkenyIowa.gov *Phone: 515-965-6420* *Fax: 515-965-6416*

Date Printed: 9/23/2024

1360 NW 121st Street
Clive, IA 50325

Polk County Aviation Authority
410 West First St
Ankeny, IA 50023

August 31, 2024
Project No: 2022001042-010
Invoice No: 6
Due Date: September 30, 2024

Project 2022001042-010 Ankeny: Construct Monument Signs

Professional Services from July 28, 2024 to August 31, 2024

Phase 1 Lump Sum

Billing Phase	Fee	Percent Complete	Earned	Previous Billing	Current Billing
90% Design	9,710.00	100.00	9,710.00	9,710.00	0.00
Issued for Bid (100%)	2,540.00	100.00	2,540.00	2,540.00	0.00
Advertise, Bidding, Contract Award	3,490.00	100.00	3,490.00	2,792.00	698.00
Topographic Survey	650.00	100.00	650.00	650.00	0.00
Construction Staking	950.00	0.00	0.00	0.00	0.00
Project Management and Coordination	1,520.00	95.00	1,444.00	1,368.00	76.00
Total Fee	18,860.00		17,834.00	17,060.00	774.00

Total Fee **774.00**

Total this Phase **$774.00**

Phase 2 Construction Permits

	Current	Prior	To-Date
Total Billings	0.00	1,557.50	1,557.50
Contract Limit (not-to-exceed)			2,150.00
Contract Limit Remaining			592.50

Total this Phase **0.00**

Phase 3 Construction Administration

	Current	Prior	To-Date
Total Billings	0.00	0.00	0.00
Contract Limit (not-to-exceed)			2,580.00
Contract Limit Remaining			2,580.00

Total this Phase **0.00**

Total Due this Invoice **$774.00**

Outstanding Invoices

Number	Date	Balance
5	7/29/2024	2,618.00
Total		**2,618.00**

McCLURE™

PROGRESS REPORT

PROJECT #	**2022001042-010**
PROJECT	**ANKENY REGIONAL AIRPORT: CONSTRUCT MONUMENT SIGNS - DESIGN, BIDDING AND CONSTRUCTION ADMINISTRATION / OBSERVATION SERVICES**
PRJ MNGR	**JAY PUDENZ, P.E., LEED AP**
CLIENT	**POLK COUNTY AVIATION AUTHORITY** **410 WEST 1ST STREET** **ANKENY, IOWA 50021**

Phone **515.965.6420**
Fax
Email: pmoritz@ankenyiowa.gov

REPORT BY **JAY PUDENZ, P.E., LEED AP**
Email: jpudenz@mcclurevision.com

REPORTING PERIOD **AUGUST 2024** NEXT REPORT **SEPTEMBER 2024**

SUMMARY OF WORK DONE LAST PERIOD

- ✓ Received Contractor quotes
- ✓ Researched low bidder to ensure Contractor is qualified to perform project
- ✓ Recommended award of contract to lowest responsive responsible bidder
- ✓ Prepared contracts and bonds with selected Contractor
- ✓ Discuss and set schedule with Contractor

FORECAST OF ACTIVITIES FOR NEXT PERIOD

- Hold Pre-Construction Meeting
- Get contracts signed and sent to Owner for approval and signature
- Review shop drawings
- Set staking in the field for Contractor
- Review construction activity

VALUE ADDED SERVICES

- N/A

INPUT NEEDED

- N/A

Part I: Design and Bidding Services (AIP Eligible)

Phase 500.B – 90% Design

Phase 500.C – Issued for Bid (100%)

Phase 504 – Construction Permits

Phase 600 – Construction Administration

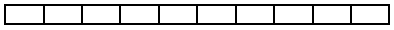

Phase 602 – Advertise, Bidding and Contract Award

Phase 700 – Topographic Survey

Phase 760 – Construction Staking

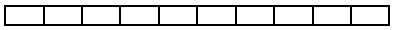

Phase 850 – Project Management and Coordination

APPLICATION FOR PARTIAL PAYMENT OF CONTRACT

Ankeny Regional AIRPORT
Central Iowa's Business Connection

Project Title: Ankeny: Reconstruct Runway 18/36 - Design and Bidding
Contractor: McClure Engineering Company
Address: 1360 NW 121st St, Suite A, Clive, IA 50325
Finance Budget Code: 644 ***Finance Project Code:*** N/A
Vendor Project or Invoice #: 2022001042-004 ***PO #*** N/A
Original Contract Date: November 9, 2023 ***Vendor #*** N/A

Date of Board Meeting 10-Oct-24 **PAYMENT REQUEST #** 10
PAYMENT PERIOD: From: 07/28/24 through: 08/31/24

Contract Summary

Original Contract Amount:	$ 757,450.00		
Net change by Change Orders:	$ -		
Contract Amount to Date: (line 1 ± 2)		$ 757,450.00	
Total completed and stored to date:	$ 654,672.30		
Retainage: 0 % of Completed Work:	$ -		
Total Earned less Retainage:		$ 654,672.30	
Less previous applications for payment:		$ 628,967.95	
SUBTOTAL			$ 25,704.35
OTHER CHARGES (Please attach an itemized list)			$ -
CURRENT PAYMENT DUE			$ 25,704.35
Balance to finish, including retainage:		$ 102,777.70	
Contract Time Remaining (If applicable)	N/A ##		

The undersigned Contractor certifies that to the best of the Contractor's knowledge, information and belief the work covered by this Application for Payment has been completed in accordance with the Contract Documents, that all the amounts have been paid by the Contractor for work for which previous Certificate(s) for Payment were issued and payments received from the Owner, and that current payment shown herein is now due.

Engineer/Consultant Approval: McClure
Firm Name

Signature Date 9/23/2024

PCAA Approval:

Signature Date

City of Ankeny Staff Approval:

Signature Date

Work Completed: See attached Progress Report.

Submit to: Paul Moritz, cc: Alexia Grgurich
Email: pmoritz@ankenyiowa.gov; AGrgurich@AnkenyIowa.gov *Phone: 515-965-6420* *Fax: 515-965-6416*

Date Printed: 9/23/2024

1360 NW 121st Street
Clive, IA 50325

Paul Moritz
Polk County Aviation Authority
410 West First St
Ankeny, IA 50023

August 31, 2024
Project No: 2022001042-004
Invoice No: 10
Due Date: September 30, 2024

Project 2022001042-004 Ankeny Regional Airport: Reconstruct Runway 18/36: Design and Bidding

Professional Services from July 28, 2024 to August 31, 2024

Phase 1 Part I: Design and Bidding Services (AIP Eligible)

Billing Phase	Fee	Percent Complete	Earned	Previous Billing	Current Billing
Existing Conditions	3,220.00	100.00	3,220.00	3,220.00	0.00
AIP Grant Administration	7,950.00	80.00	6,360.00	5,962.50	397.50
Preliminary Design	8,180.00	100.00	8,180.00	8,180.00	0.00
30% Design	182,600.00	100.00	182,600.00	182,600.00	0.00
90% Design	457,477.00	90.00	411,729.30	388,855.45	22,873.85
Issued for Bid (100%)	64,670.00	0.00	0.00	0.00	0.00
Construction Permits	2,650.00	0.00	0.00	0.00	0.00
Advertise, Bidding, Contract Award	31,303.00	0.00	0.00	0.00	0.00
Project Closeout	1,800.00	0.00	0.00	0.00	0.00
Project Management and Coordination	48,660.00	80.00	38,928.00	36,495.00	2,433.00
Topographic Survey	3,655.00	100.00	3,655.00	3,655.00	0.00
Subcontractor - McFarland Johnson	32,700.00	0.00	0.00	0.00	0.00
Total Fee	844,865.00		654,672.30	628,967.95	25,704.35

Total Fee **25,704.35**

Total this Phase **$25,704.35**

Phase 2 Part II: Design and Bidding Services (AIP Ineligible)

Billing Phase	Fee	Percent Complete	Earned	Previous Billing	Current Billing
Preliminary Design	3,880.00	0.00	0.00	0.00	0.00
Total Fee	3,880.00		0.00	0.00	0.00

Total Fee **0.00**

Total this Phase **0.00**

Project	2022001042-004	Ankeny - Reconst Runway 18/36 Design/Bid	Invoice	10

Total Due this Invoice **$25,704.35**

Outstanding Invoices

Number	Date	Balance
9	7/29/2024	31,792.35
Total		**31,792.35**

McCLURE™

PROGRESS REPORT

PROJECT #	**2022001042-004**
PROJECT	**ANKENY REGIONAL AIRPORT: RECONSTRUCT RUNWAY 18/36 - DESIGN AND BIDDING**
PRJ MNGR	**JAY PUDENZ, P.E., LEED AP**
CLIENT	**POLK COUNTY AVIATION AUTHORITY** **410 WEST 1ST STREET** **ANKENY, IOWA 50021**

Phone **515.965.6420**
Fax
Email: pmoritz@ankenyiowa.gov

REPORT BY **JAY PUDENZ, P.E., LEED AP**
Email: jpudenz@mcclurevision.com

REPORTING PERIOD **AUGUST 2024** NEXT REPORT **SEPTEMBER 2024**

SUMMARY OF WORK DONE LAST PERIOD

- ✓ Continued on 90% design, including plans, specifications and 90% CSPP
- ✓ Held internal Design Challenge meeting as well as similar meeting with the Owner regarding design questions / issues (phasing, how to incorporate extension into plans, etc.)

FORECAST OF ACTIVITIES FOR NEXT PERIOD

- Continue on 90% design, including plans, specifications and 90% CSPP
- Hold meeting with Owner and FAA to discuss design questions discussed at internal design challenge meetings

VALUE ADDED SERVICES

- N/A

INPUT NEEDED

- N/A

Part I: Design and Bidding Services (AIP Eligible)

Phase 200 – Existing Conditions

Phase 300 – AIP Grant Administration

Phase 400 – Preliminary Design

Phase 500.A – 30% Design

Phase 500.B – 90% Design

Phase 500.C – Issued for Bid (100%)

Phase 504 – Construction Permits

Phase 602 – Advertise, Bidding and Contract Award

Phase 800 – Project Closeout

Phase 850 – Project Management and Coordination

Part II: Design and Bidding Services (AIP Ineligible)

Phase 400 – Preliminary Design

Invoice

REMIT TO:	Foth Infrastructure & Environment,LLC P.O. Box 8418 Carol Stream, IL 60197-8418

NOTE: Communications concerning disputed debts, including an instrument tendered as full satisfaction of a disputed debt, are to be sent to Foth Infrastructure & Environment, LLC treasurer, 2121 Innovation Court, Suite 100, P.O. Box 5095, De Pere, WI 54115-5095

October 03, 2024
Project No: 0024P178.00
Invoice No: 92599

Polk County Aviation Authority
ATTN: Paul Moritz, P.E.
410 West 1st Street
Ankeny, IA 50023

Invoice Total USD 3,800.00

Project 0024P178.00 Independent Fee Estimate for Runway 18 Extension Design

Professional Services through September 30, 2024

Lump Sum

Total Fee	3,800.00			
Percent Complete	100.00	Total Earned	3,800.00	
		Previous Fee Billing	0.00	
		Current Fee Billing	3,800.00	
		Total Fee		**3,800.00**
			Total This Invoice	**USD 3,800.00**

POLK COUNTY AVIATION AUTHORITY
LISTING OF BILLS TO BE APPROVED
FOR THE OCTOBER 10, 2024 BOARD MEETING

Vendor	Amount	Date of Invoice	Description
Allen Lawn Care and Landscaping	400.00	08/30/24	Rough cut mowing 08/12/24
Allen Lawn Care and Landscaping	400.00	09/26/24	Rough cut mowing 09/17/24
Airfield Mat Systems, Inc.	23,524.00	09/09/24	football shaped mats and anchors for staking and can-mounted lights
Aviation Management Consulting Group	2,123.00	09/17/24	IKV Management Agreement Review
Baker Electric	483.22	09/18/24	Repair feed to obstruction lights
Brick Gentry Law Firm	3,000.00	09/25/24	General legal services
Cutting Edge Outdoors, LLC	1,290.00	09/03/24	Perimeter mowing and additional fence line mowing
Des Moines Register	214.40	08/31/24	**August** A/P, minutes
Des Moines Register	156.00	09/30/24	**September** A/P, minutes
Eide Bailly	3,000.00	08/31/24	Interim audit work through August 31, 2024 for the June 30, 2024 financial statements
Exec 1 Aviation	5,000.00	09/30/24	On-site management fee
Lamson Dugan & Murray LLP	680.00	09/18/24	Outside legal counsel services
McClure Engineering	5,667.73	08/31/24	Professional services
MidAmerican Energy	520.65	09/10/24	Lift station; Runway lights; Lighting services
Paul Moritz	550.88	09/20/24	Reimbursement for lunches/water/ice during meetings with Aviation Management Consulting Group
Perficut	950.00	09/11/24	Broadleaf Weed Control
Perficut	850.00	08/31/24	Fenceline Weed Control
Special event deposit refund	200.00	09/12/24	Above & Beyond Cancer, Inc.
Tenant deposit refund	175.00	09/30/24	Fox 3 Holdings/Ken Ashley E-08 T-Hangar
TrueNorth Companies, LLC	64,460.79	09/27/24	Property, electronic data, boiler/equipment, public officials and general liability
Total Airport Operations Fund	$ 113,645.67		
McClure Engineering	500.00	08/31/24	North Property Line Box Hangers
Foth Infrastructure & Environment	3,800.00	10/03/24	Independent Fee Estimate for Runway 18 Extension Design
McClure Engineering	16,995.55	08/31/24	Extend Runway 18: ADIP/Aeronautical Survey, Airspace Analysis, and Data Collection Services
McClure Engineering	11,895.57	08/31/24	Taxiway D Apron & Access Rodway Paving - Phase 4, Engineering (Construction Management)
McClure Engineering	25,704.35	08/31/24	Reconstruct Runway 18/36 Design and Bidding Engineering Professional Services
McClure Engineering	774.00	08/31/24	Construct Monument Signs
Total Capital Improvements Fund	$ 59,669.47		
Grand Total	$ 173,315.14		FY 2024 charges paid in FY 2025

POLK COUNTY AVIATION AUTHORITY
Balance Sheet
As of September 30, 2024

	Sep 30, 24
ASSETS	
Current Assets	
Checking/Savings	
102 · FIRST NATIONAL BANK	5,097,895.40
Total Checking/Savings	5,097,895.40
Accounts Receivable	
112 · ACCOUNTS RECEIVABLE	403.55
Total Accounts Receivable	403.55
Other Current Assets	
113 · PRE-PAID EXPENSES	62,688.84
114 · LEASE RECEIVABLE	747,148.49
Total Other Current Assets	809,837.33
Total Current Assets	5,908,136.28
Fixed Assets	
140 · NON-DEPRECIABLE ASSETS	6,956,965.27
141 · DEPRECIABLE ASSETS	26,159,214.02
180 · CONSTRUCTION IN PROGRESS	1,159,103.39
181 · ACCUMULATED DEPRECIATION	(18,654,624.06)
Total Fixed Assets	15,620,658.62
TOTAL ASSETS	21,528,794.90
LIABILITIES & EQUITY	
Liabilities	
Current Liabilities	
Accounts Payable	
202 · ACCOUNTS PAYABLE	172,419.49
Total Accounts Payable	172,419.49
Other Current Liabilities	
204 · RETAINAGE PAYABLE	26,239.28
206 · DEFERRED REVENUE	11,790.24
207 · HANGAR/LEASE ADVANCE DEPOSITS	17,430.00
209 · DEFERRED LEASE REVENUE	727,756.69
Total Other Current Liabilities	783,216.21
Total Current Liabilities	955,635.70
Total Liabilities	955,635.70
Equity	
3000 · INVESTED IN CAPITAL ASSETS	15,541,825.02
3001 · UNRESTRICTED NET ASSETS	7,234,589.86
3003 · RESTRICTED FOR AIRPORT IMPROVE	(2,203,255.68)
Total Equity	20,573,159.20
TOTAL LIABILITIES & EQUITY	21,528,794.90

POLK COUNTY AVIATION AUTHORITY

Profit & Loss Budget vs. Actual

July 2024 through June 2025

	Jul '24 - Jun 25	Budget	$ Over Budget	% of Budget
Ordinary Income/Expense				
Income				
400 · MEMBER GOVERNMENT ASSESSMENTS	683,369.91	1,366,740.00	(683,370.09)	50.0%
401 · LEASE AND LICENSE FEE INCOME	87,495.95	249,000.00	(161,504.05)	35.14%
403 · FUEL FEE INCOME	9,073.28	49,000.00	(39,926.72)	18.52%
407 · OTHER REVENUE	5,948.02	0.00	5,948.02	100.0%
Total Income	785,887.16	1,664,740.00	(878,852.84)	47.21%
Gross Profit	785,887.16	1,664,740.00	(878,852.84)	47.21%
Expense				
601 · OFFSITE MANAGEMENT SERVICES	0.00	75,700.00	(75,700.00)	0.0%
602 · POSTAGE & OFFICE SUPPLIES	0.00	1,300.00	(1,300.00)	0.0%
603 · ONSITE MANAGEMENT SERVICES	15,000.00	60,000.00	(45,000.00)	25.0%
604 · CONSULTING & MANAGEMENT	7,430.50	0.00	7,430.50	100.0%
610 · ADVERTISING & PROMOTION	57.52	700.00	(642.48)	8.22%
611 · PUBLICATIONS	511.20	2,300.00	(1,788.80)	22.23%
612 · CONFERENCES AND SEMINARS	550.88	4,000.00	(3,449.12)	13.77%
613 · LEGAL SERVICES	8,210.00	24,000.00	(15,790.00)	34.21%
614 · AUDIT SERVICES	3,000.00	16,100.00	(13,100.00)	18.63%
616 · GENERAL INSURANCE	2,161.13	8,700.00	(6,538.87)	24.84%
617 · PROPERTY INSURANCE	11,240.10	46,000.00	(34,759.90)	24.44%
618 · PUBLIC OFFICIALS INSURANCE	446.52	1,600.00	(1,153.48)	27.91%
630 · SNOW REMOVAL & MOWING	2,580.00	106,000.00	(103,420.00)	2.43%
631 · REPAIRS & MAINTENANCE (General)	54,742.38	115,000.00	(60,257.62)	47.6%
640 · UTILITIES	1,423.28	7,600.00	(6,176.72)	18.73%
644 · AIRPORT PLANNING & ENGINEERING	8,805.52	63,000.00	(54,194.48)	13.98%
645 · MISCELLANEOUS	0.00	100.00	(100.00)	0.0%
703 · NORTH PROPERTY LINE BOX HANGARS	1,155.62	1,264,350.00	(1,263,194.38)	0.09%
718 · EXTEND RUNWAY 18	26,975.75	0.00	26,975.75	100.0%
720 · SOUTH TERMINAL TEE HANGARS	0.00	50,000.00	(50,000.00)	0.0%
721 · TAXIWAY D ACCESS ROAD	54,156.40	0.00	54,156.40	100.0%
729 · RECONSTRUCT & EXTEND RW 18/36	57,496.70	14,737,130.00	(14,679,633.30)	0.39%
730 · SIGNING AND ENTRY IMPROVEMENTS	3,829.50	0.00	3,829.50	100.0%
734 · ELEVATOR AND LOBBY ADDITION	0.00	600,000.00	(600,000.00)	0.0%
736 · REMOVE & REPLACE PAVEMENT	0.00	1,108,000.00	(1,108,000.00)	0.0%
Total Expense	259,773.00	18,291,580.00	(18,031,807.00)	1.42%
Net Ordinary Income	526,114.16	(16,626,840.00)	17,152,954.16	(3.16%)
Other Income/Expense				
Other Income				
402 · INVESTMENT INCOME	66,228.34	139,000.00	(72,771.66)	47.65%
502 · INSURANCE REIMBURSEMENT	258.00			
504 · FAA GRANT REIMBURSEMENT	0.00	14,658,417.00	(14,658,417.00)	0.0%
505 · STATE GRANT REIMBURSEMENT	0.00	350,000.00	(350,000.00)	0.0%
Total Other Income	66,486.34	15,147,417.00	(15,080,930.66)	0.44%
Net Other Income	66,486.34	15,147,417.00	(15,080,930.66)	0.44%
Net Income	592,600.50	(1,479,423.00)	2,072,023.50	(40.06%)

POLK COUNTY AVIATION AUTHORITY

A/R Aging Summary

As of September 30, 2024

	Current	1 - 30	31 - 60	61 - 90	> 90	TOTAL
RICK'S LANDING, LLC	403.55	0.00	0.00	0.00	0.00	403.55
TOTAL	403.55	0.00	0.00	0.00	0.00	403.55

Index

Sheet	Project Name	Contractors	Grant Eligible?	Original Contract Amount	Change orders & Non-Contract	Total Project Cost	Expenditures to date	Remaining Obligation	Retainage	Expected Grant Receipts	Grant Funds Received to date:	FY Completed	
Sheet01	General Engineering - 2022 Agreement	McClure Engineering	EXP	66,444.72	-	66,444.72	66,444.72	-	-	-	-		-
Sheet08	General Planning - 2022 Agreement	HDR Engineering	EXP	42,000.00	-	42,000.00	12,692.01	29,307.99	-	-	-		-
Sheet03	Wildlife Hazard Mitigation	USDA, APHIS, General	EXP	46,000.00	(5,163.03)	40,836.97	36,991.86	3,845.11	-	-	-		-
Sheet11	Strengthen & Extend RW 18/36	McClure & HDR	FAA	438,521.00	27,149.60	465,670.60	437,468.60	28,202.01	-	224,283	224,283		-
Sheet22	North Property Line Box Hangars	McClure, Jensen Builders	IaDOT	1,549,966.90	(2,354.33)	1,547,612.57	1,543,906.57	3,706.00	-	565,200	565,200		-
Sheet23	3-Year Vegetation Control Agreement	Perficut ('23-'25)	EXP	47,586.00	-	47,586.00	30,376.00	17,210.00	-	-	-		-
Sheet24	Taxiway D Apron and Access Roadway Paving-Phase 4	McClure & Concrete Tech	IaDOT	733,200.85	7,500.00	740,700.85	678,016.55	62,684.30	26,239.28	-	-		-
Sheet25	Airport Brand Signing and Entry Improvements	McClure & 818, LLC	EXP	102,964.89	-	102,964.89	23,391.50	79,573.39	-	-	-		-
Sheet29	North Property Line Box Hangars - Phase 2	McClure	IaDOT	411,425.00	-	411,425.00	-	411,425.00	-	-	-		
Sheet26	Reconstruct Runway 18/36	McClure/Foth	FAA	761,250.00	1,690.62	762,940.62	660,162.92	102,777.70	-	-	-		-
Sheet30	Extend Runway 18	McClure	FAA	94,792.00	-	94,792.00	26,975.75	67,816.25	-	-	-		
Sheet27	T-Hangars Gutter Replacement Project	Wood Roofing & Sheet Metal Co.	EXP	73,256.40	12,200.00	85,456.40	85,456.40	-	-	-	-	FY24	-
Sheet28	Rotating Beacon Replacement	Van Maanen Electric, Inc	EXP	22,753.00	-	22,753.00	22,753.00	-	-	-	-	FY24	
Sheet07	Taxiway D Apron and Access Roadway Paving-Phase 3	McClure, Concrete Tech	IaDOT	736,490.90	41,046.73	777,537.63	777,537.63	-	-	312,682	312,682	FY24	-
													-
	Grayed out = Completed items, no new charges expected			12,527,181.04	1,981,390.17	14,508,571.21	13,701,184.20	806,547.75	26,239.28	5,702,871	5,702,871		-
									$ 26,239.28		$ -		
									^= 204 Retainage Pay		^ = 110 Grant AR		

RESOLUTION 2024-

RESOLUTION ACCEPTING TWO IOWA DOT GRANT AGREEMENTS FOR THE PARTIAL FUNDING OF THE NORTH PROPERTY LINE BOX HANGARS – PHASE 2 PROJECT AT THE ANKENY REGIONAL AIRPORT

WHEREAS, the Polk County Aviation Authority (PCAA), as the owner and operator of the Ankeny Regional Airport, is undertaking a project to add a row of box hangars along the north property line of the airport adjacent to the existing taxilane to help address the need for additional storage space for larger aircraft at the airport, and

WHEREAS, the PCAA is in the position to the design of the second phase of the said box hangar development, which will provide the two additional box hangars. The said phase will consist of the following two projects:

1. North Property Line Box Hangars – Phase 2 Apron Paving
2. North Property Line Box Hangars – Phase 2 Vertical Infrastructure

; and

WHEREAS, the PCAA submitted applications to the Iowa DOT for FY 2025 State Aviation Program funding to assist in the financing and construction of these two proposed projects; and

WHEREAS, the Iowa DOT subsequently approved the grants to the PCAA and, pending approval of the instruments, has agreed to reimburse the following percentages of the project costs in accordance with the attached grant agreements:

1. Phase 2 Apron Paving: 50% of the project costs, up to a maximum of $111,425.00
2. Phase 2 Vertical Infrastructure: 30% of the project costs, up to a maximum of $300,000.00

; and

WHEREAS, the Polk County Aviation Authority believes that it is in the best interest of the airport to accept the said grant agreements with the Iowa DOT.

NOW, THEREFORE, BE IT RESOLVED that the Polk County Aviation Authority accepts the following two grant agreements between the Polk County Aviation Authority and the Iowa Department of Transportation for the partial funding the said projects, and further authorizes the Aviation Authority Chairperson to execute the grant agreements:

1. **North Property Line Box Hangars Phase 2–**
   Iowa DOT AIP Project Number 9I250IKV100

2. North Property Line Box Hangars Phase 2
Iowa DOT GAVI Project Number 9I250IKV300

Passed and approved this 10th day of October, 2024.

_____
PCAA Chairperson

Attest_____
PCAA Secretary

IOWA | DOT

KIM REYNOLDS, GOVERNOR
ADAM GREGG, LT. GOVERNOR

SCOTT MARLER, IOWA DOT DIRECTOR
TROY JERMAN, IOWA DOT COO

IOWA DEPARTMENT OF TRANSPORTATION
Modal Transportation Bureau - Aviation
800 Lincoln Way
Ames, Iowa 50010
515-239-1048
www.iowadot.gov/aviation

August 26, 2024

Ankeny Regional Airport
Paul Moritz
410 W First Street
Ankeny, IA 50023

Dear Paul:

Congratulations! The FY 2025 Airport Development Application you submitted with the Iowa DOT was approved for funding by the Iowa Transportation Commission on August 13, 2024. The grant award is for **50%** of eligible costs up to a maximum state share of **$111425** for the following project: **Construct Hangar Aprons**.

Attached is a grant agreement between the airport sponsor and the Iowa DOT. The airport sponsor should review, sign, and email a signed copy to me. Hard copies are not required. **The airport sponsor has 90 days to sign the grant and return it to the Iowa DOT for our signature.** Any contracts not returned within the 90-day window may be canceled. Once received, the Iowa DOT will sign and return a fully executed contract to the sponsor. The airport sponsor is authorized to begin the project **after** receiving the contract with both Iowa DOT and Sponsor signatures in place.

Please review the agreement and note the Airport's responsibilities and assurances, required affirmative action, targeted small business and audit requirements. If the sponsor will be requesting reimbursement for engineering services, a copy of the agreement will need to be provided to the Iowa DOT. The Iowa DOT recommends that engineering agreements are either lump sum, or cost plus with fixed overhead rate and maximum dollar amount. Any engineering agreement more than $150,000 must have a pre-audit completed by the Iowa DOT. All engineering agreements that are paid with state funds are subject to a final audit. Please include state related nondiscrimination and targeted small business clauses in your agreements.

Stand-alone Iowa DOT grant administration expenses as part of the engineering agreement are not eligible for reimbursement. Project administration, closeout, and other related engineering costs remain eligible. Sponsors needing assistance on administration of these grants can reach out to our office directly.

A few important reminders as you prepare to get underway with the project:

- The project must be under obligation within 12 months.

- Please note that only expenses incurred on or after the Iowa DOT signature date on the agreement are eligible for reimbursement.
- Submit claims for reimbursement with copies of invoices, canceled checks or other documentation that the bills have been paid.
- Reimbursement requests should be made in the same fiscal year that the work is completed. Reimbursement for work done near the end of a state fiscal year (June 30) must be requested by August 1.
- A final acceptance form must be completed and submitted with the final claim for reimbursement. Required forms can be downloaded from the Aviation Web site at https://iowadot.gov/aviation/airport-managers-and-sponsors/forms.

If you have any questions regarding this information, please call me at 515-239-1048.

Good luck with your airport project!

Sincerely,

Shane Wright, C.M.
Program Manager

IOWA DEPARTMENT OF TRANSPORTATION
AGREEMENT
FOR THE FISCAL YEAR 2025
Airport Improvement Program

This AGREEMENT is made between the Iowa Department of Transportation called the "Iowa DOT" and **Polk County Aviation Authority**, hereafter the "SPONSOR".

1.00 PURPOSE: The purpose of this agreement is to set forth terms, conditions and obligations for accomplishment of certain improvements at the **Ankeny Regional Airport** hereafter the "Airport."

Improvements shall consist of: **Construct Hangar Aprons**, as more clearly defined in the project application.

It shall be referred to as the "Project" and shall be identified by
Project number: **9I250IKV100**
Contract number: **CNTRT-00007375**

2.0 GENERAL PROVISIONS

2.01 The SPONSOR shall have 90 days to sign and return this agreement or the Iowa DOT reserves the right to revoke this grant.

2.02 The SPONSOR shall have the project under contract no later than 12 months after the date of the agreement or the Iowa DOT reserves the right to revoke this grant.

2.03 The Iowa DOT agrees to reimburse the SPONSOR **50%** of the eligible project costs, not to exceed the maximum amount payable of **$111,425**, incurred according to the terms of this agreement. Reimbursement will be made in whole dollar amounts only, rounded down. Final payment request may include documentation of unreimbursed amounts due to rounding, and final reimbursement will be made up to the contract amount in whole dollars.

2.04 All projects meeting the definition of public improvements shall follow the competitive bid and competitive quotation procedures for vertical infrastructure as identified in Chapter 26 of the Code of Iowa and 761 Iowa Administrative Code Chapter 180. (https://www.legis.iowa.gov/docs/iac/chapter/761.180.pdf)

- Competitive bid procedures for all projects greater than $196,000.
- Competitive quotation procedures for airport authorities and city sponsors with populations greater than 50,000 for projects between $109,000 and $196,000
- Competitive quotation procedures for airport authorities and city sponsors with population of 50,000 or less for projects between $81,000 and $196,000,
- Informal local procedures for projects less than the thresholds identified for competitive quotations.

The SPONSOR shall follow requirements of the Iowa Code Section 544A.18, 193B Iowa Administrative Code Chapter 5, Chapter 542B of the Code of Iowa, and 193C Administrative Code Chapter 1 to determine when professional engineering or architectural plans and

specifications must be used. The SPONSOR shall submit any plans, specifications and other contract documents to the Iowa DOT for its files.

2.05 Should the SPONSOR fail to comply with any Condition or Assurance provided herein, the Iowa DOT may withhold further payment and may require reimbursement of any or all payments made by the Iowa DOT toward accomplishment of the Project.

2.06 The Iowa DOT shall not waive any right of authority by making payments pursuant to this agreement, and such payments shall not constitute approval or acceptance of any part of the Project.

2.07 Neither the Department nor the Sponsor intend to create rights in, and shall not be liable to, any third parties by reason of this agreement.

2.08 If any provision of this agreement is held invalid, the remainder of this agreement shall not be affected thereby if such remainder would then continue to conform to applicable law and the intent of this agreement.

2.09 The Iowa DOT shall determine what costs charged to the project account are eligible for participation under the terms of this agreement and the SPONSOR shall bear all additional costs accepted and paid. Only those eligible costs incurred after this agreement is executed shall be reimbursed, unless the SPONSOR receives written notice from the Iowa DOT that the Sponsor has authority to incur costs.

2.10 Notwithstanding any other provisions of this agreement, the Iowa DOT shall have the right to enforce, and may require the SPONSOR to comply with, any and all Conditions and Assurances agreed to herein.

2.11 The Iowa DOT's obligations hereunder shall cease immediately, without penalty of further payment being required, in any year for which the General Assembly of the State of Iowa fails to make an appropriation or reappropriation to pay such obligations, and the Iowa DOT's obligations hereunder shall cease immediately without penalty of further payment being required at any time where there are not sufficient authorized funds lawfully available to the Iowa DOT to meet such obligations. The Iowa DOT shall give the SPONSOR notice of such termination of funding as soon as practicable after the Iowa DOT becomes aware of the failure of funding. In the event the Iowa DOT provides such notice, the SPONSOR may terminate this agreement or any part thereof.

2.12 The SPONSOR is the contracting agent and, as such, retains sole responsibility for compliance with local, state and federal laws and regulations related to accomplishment of the Project. The sponsor shall ensure compliance with Title VI of the Civil Rights Act of 1964, 78 STAT. 252, 42 U.S.C. 2000d-42 U.S.C. 2000d-4, and all requirements imposed by or pursuant to the end that no person in the United States shall, on the grounds of race, color, or national origin, be excluded from participation in, be denied the benefits of, or be otherwise subjected to discrimination under any program or activity receiving financial assistance from the Iowa DOT.

In accordance with Iowa Code Chapter 216, the SPONSOR shall not discriminate against any

person on the basis of race, color, creed, age, sex, sexual orientation, gender identity, national origin, religion, pregnancy, or disability.

2.13 Funding will be available for reimbursement of the project for three years after the date of the agreement, unless appropriations are withdrawn under 2.10. Assurances in this agreement remain in full force and effect for a period of 20 years from the date of the agreement.

2.14 The SPONSOR agrees to indemnify, defend, and to hold the Iowa DOT harmless from any action or liability out of the design, construction, maintenance and inspection or use of this project. This agreement to indemnify, defend, and hold harmless applies to all aspects of the Iowa DOT's application review and approval process, plan and construction reviews, and funding participation.

2.15 In the case of any dispute concerning the terms of this agreement, the parties shall submit the matter to arbitration pursuant to the Iowa Code Chapter 679A. Either party has the right to submit the matter to arbitration after 10 days notice to the other party of the intent to seek arbitration. The written notice must include a precise statement of the dispute. The Iowa DOT and the SPONSOR agree to be bound by the decision of the appointed arbitrator. Neither party may seek any remedy with the State or Federal courts absent exhaustion of the provisions of this paragraph for arbitration.

2.16 Infrastructure and/or work products developed through this grant become the property of the SPONSOR and the SPONSOR's responsibility to maintain.

2.17 The attached Exhibit(s) will apply and are hereby made a part of this agreement:

- Exhibit A, "Utilization of Targeted Small Business (TSB) Enterprises on Non-Federal Aid Projects (Third-Party State Assisted Projects)"

3.00 PROJECT CONDITIONS

3.01 The SPONSOR Agrees to:

(a) Let contracts according to provisions of Chapter 26 of the Iowa Code and preside at all public hearings occasioned by the Project.

(b) Contract for all professional and construction services as needed, submitting a copy of any engineering/consultant contract to the Iowa DOT. If the engineering/consultant agreement is more than $150,000 and the sponsor will request state reimbursement for the engineering/consultant services, the agreement must be submitted to the Iowa DOT for pre-audit prior to execution of the agreement.

(c) Establish and maintain a project schedule and provide the schedule to the Iowa DOT.

(d) Obtain and provide the sales tax exemption certificates through the Iowa Department of Revenue and Finance to the successful bidder and any subcontractors to enable them to purchase qualifying materials for the project free of sales tax.

(e) Submit to the Iowa DOT a Request for Reimbursement form, copies of invoices, and proof of payment for reimbursement. Progress payments are allowed.

(f) Inspect work and equipment, test materials, and control construction to ensure that the design intent of the plans and specifications is achieved.

(g) Inform the Iowa DOT of construction completion and allow the Iowa DOT access to review the completed project.

(h) Certify satisfactory completion of the Project by resolution or signed final acceptance form and provide a copy to the Iowa DOT.

(i) Retain all records relating to project cost, including supporting documents, for a period of three (3) years following final payment by the Iowa DOT, and to make such records and documents available to Iowa DOT personnel for audit.

(j) Ensure that applicable General Provisions and Project Conditions are included in any agreement between the SPONSOR and Engineer/Consultant.

4.00 SPECIAL PROVISIONS

4.01 None

5.00 SPONSOR ASSURANCES

By authorizing execution of this agreement the SPONSOR hereby certifies that:

5.01 It will not enter into any transaction which would operate to deprive it of any of the rights and powers necessary to perform any or all of the assurances made herein, unless by such transaction the obligation to perform all such covenants are assumed by another public agency found by the Iowa DOT to be eligible under the laws of the State of Iowa to assume such obligations and to have the power, authority, and financial resources to carry out all such obligations. If an arrangement is made for the management or operation of the Airport by any agency or person other than the SPONSOR or an employee of the SPONSOR, the SPONSOR will reserve sufficient rights and authority to insure that the Airport will be operated and maintained in accordance with these assurances. The SPONSOR retains responsibility for compliance with these assurances and all other provisions of this agreement, regardless of any arrangement for management or operation of the airport.

5.02 It will not dispose of or encumber its title or other interests in the site and facilities during the 20-year period of this agreement.

5.03 It will operate and maintain in a safe and serviceable condition the Airport and all facilities thereon and connected therewith which are necessary to service the aeronautical users of the Airport and will not permit any activity thereon which would interfere with its use for airport purposes.

5.04 Insofar as it is within its power and reasonable, the Sponsor will, either by the acquisition and retention of easements or other interests in or rights for the use of land or airspace and by the adoption and enforcement of zoning regulations, prevent the construction, erection, alteration, or growth of any structure, tree, or other object in the approach areas of the runways of the Airport, which would constitute an obstruction to air navigation according to the criteria or standards prescribed in Section 77.23 as applied to Section 77.25, Part 77, of the Federal Aviation Regulations. In addition, the Sponsor will not erect or permit the erection of any

permanent structure or facility which would interfere materially with the use, operation, or future development of the Airport, or any portion of a runway approach area in which the Sponsor has acquired, or hereafter acquires.

5.05 It will operate and maintain the facility in accordance with the minimum standards as may be required or prescribed by the Iowa DOT for the maintenance and operation of such facilities as identified in the Iowa Administrative Code 761-Chapter 720.10

5.06 It will operate the Airport as such for the use and benefits of the public. In furtherance of this covenant (but without limiting its general applicability and effect), the SPONSOR specifically agrees that it will keep the Airport open to all types, kinds, and classes of aeronautical use on fair and reasonable terms without unlawful discrimination between such types, kinds, and classes. The SPONSOR may establish such fair, equal, and not unjustly discriminatory conditions to be met by all users of the Airport as may be necessary for the safe and efficient operation of the airport. The SPONSOR may also prohibit or limit any given type, kind, or class of aeronautical use of the Airport if such action is necessary for the safe operation of the Airport or necessary to serve the civil aviation need of the public. It will operate the Airport on fair and reasonable terms, and without unjust discrimination.

5.07 The SPONSOR will keep up-to-date and provide to the Iowa DOT an airport layout plan. The SPONSOR will not make or permit the making of any changes or alterations in the Airport or any of its facilities other than in conformity with the airport layout plan, if such changes or alterations might adversely affect the safety, utility, or efficiency of the Airport.

6.00 EXECUTION OF THE AGREEMENT. By resolution made a part of this agreement the SPONSOR authorized the undersigned to execute this agreement.

Signed this _____ day of _____, _____, on behalf of the SPONSOR.

By: _____ Attested: _____

Title: _____ Title: _____

Signed this _____ day of _____, _____, on behalf of the Iowa Department of Transportation.

By: _____
Tamara Nicholson
Director
Modal Transportation Bureau

Exhibit A

CONTRACT PROVISION

Targeted Small Business (TSB) Affirmative Action Responsibilities

on

Non-Federal Aid Projects (Third-Party State-Assisted Projects)

October 2023

1. TSB DEFINITION

A TSB is a small business, as defined by Iowa Code Section 15.102(10), which is 51% or more owned, operated and actively managed by one or more women, minority persons, service-disabled veterans or persons with a disability provided the business meets all of the following requirements: is located in this state, is operated for profit and has an annual gross income of less than 4 million dollars computed as an average of the three preceding fiscal years.

2. TSB REQUIREMENTS

In all State-assisted projects made available through the Iowa Department of Transportation, local governments have certain affirmative action requirements to encourage and increase participation of disadvantaged individuals in business enterprises. These requirements are based on Iowa Code Section 19B.7. These requirements supersede all existing TSB regulations, orders, circulars, and administrative requirements.

3. TSB DIRECTORY INFORMATION

Available from: Iowa Economic Development Authority Targeted Small Business Certification Program 1963 Bell Ave.

Suite 200

Des Moines, IA 50315 Phone: (515-348-6193)

Website: https://www.iowaeda.com/small-business/targeted-small-business/

4. THE CONTRACTOR'S TSB POLICY

The contractor is expected to promote participation of disadvantaged business enterprises as suppliers, manufactures and subcontractors through a continuous, positive, result-oriented program. Therefore, the contractor's TSB policy shall be:

> It is the policy of this firm that Targeted Small Business (TSB) concerns shall have the maximum practical opportunity to participate in contracts funded with State-assisted funds which are administered by this firm (e.g. suppliers, manufacturers and subcontractors). The purpose of our policy is to encourage and increase the TSB participation in contracting opportunities made available by State-assisted programs.

5. CONTRACTORS SHALL APPOINT AN EQUAL EMPLOYMENT OPPORTUNITY (EEO) OFFICER

The contractor shall designate a responsible person to serve as TSB officer to fulfill the contractors affirmative action responsibilities. This person shall have the necessary statistics, funding, authority, and responsibility to carry out and enforce the firm's EEO policy. The EEO officer shall be responsible for developing, managing, and implementing the program on a day-to-day basis. The officer shall also:

A. For current TSB information, contact the Iowa Economic Development Authority (515-348-6193) to identify potential material suppliers, manufacturers, and contractors.

A. Make every reasonable effort to involve TSBs by soliciting quotations from them and incorporating them into the firm's bid.

B. Make every reasonable effort to establish systematic written and verbal contact with those TSBs having the materials or expertise to perform the work to be subcontracted, at least two weeks prior to the time quotations are submitted. Maintain complete records of negotiations efforts.

C. Provide or arrange for assistance to TSBs in seeking bonding, analyzing plans/specifications or other actions that can be viewed as technical assistance.

D. Ensure the scheduled progress payments are made to TSBs as agreed in subcontract agreements.

E. Require all subcontractors and material suppliers to comply with all contract equal opportunity and affirmative action provisions.

6. COUNTING TSBs PARTICIPATION ON A PROJECT

TSBs are to assume actual and contractual responsibilities for provision of materials/supplies, subcontracted work, or other commercially useful function.

A. The bidder may count:

1) Planned expenditures for materials/supplies to be obtained from TSB suppliers and manufacturers; or
2) Work to be subcontracted to a TSB; or
3) Any other commercially useful function.

B. The contractor may count:

1) 100% of an expenditure to a TSB manufacturer that produces/supplies goods manufactured from raw materials.
2) 60% of an expenditure to TSB suppliers that are not manufacturers; provided the suppliers perform a commercially useful function in the supply process.
3) Only those expenditures to TSBs that perform a commercially useful function in the work of a contract, including those as a subcontractor.
4) Work the Contracting Authority has determined that it involves a commercially useful function. The TSB must have a necessary and useful role in the transaction of a kind for which there is a market outside the context of the TSB program. For example, leasing equipment or purchasing materials from prime contractor would not count.

7. REQUIRED DATA, DOCUMENTS AND CONTRACT AWARD PROCEDURES FROM BIDDERS/CONTRACTORS FOR PROJECTS WITH ASSIGNED GOALS

A. Bidders

Bidders who fail to demonstrate reasonable positive efforts may be declared ineligible to be awarded the contract. Bidders shall complete the bidding documents plus a separate form called "TSB Pre-Bid Contact Information". This form includes:

1) Name(s) of the TSB(s) contacted regarding subcontractable items.
2) Date of the contract.
3) Whether or not a TSB bid/quotation was received.
4) Whether or not the TSB's bid/quotation was used.
5) The dollar amount proposed to be subcontracted.

B. Contractors Using Quotes From TSBs

Use those TSBs whose quotes are listed in the "Quotation Used in Bid" column along with a "yes" indicated on the Pre- BID Contract Information Form.

C. Contractors NOT Using Quotes From TSBs

If there are no TSBs listed on the Pre-bid Contact Information Form, then the contractor shall document all efforts made to include TSB participation in this project by documenting the following:

1) What pre-solicitation or pre-bid meetings scheduled by the contracting authority were attended?
2) Which general news circulation, trade associations and/or minority-focused media were advertised concerning the subcontracting opportunities?
3) Were written notices sent to TSBs that TSBs were being solicited and was sufficient time allowed for the TSBs to participate effectively?
4) Were initial solicitations of interested TSBs followed up?
5) Were TSBs provided with adequate information about the plans, specifications, and requirements of the contract?
6) Were interested TSBs negotiated with in good faith? If a TSB was rejected as unqualified, was the decision based on an investigation of their capabilities?
7) Were interested TSBs assisted in obtaining bonding, lines of credit or insurance required by the contractor?
8) Were services used of minority community organization, minority contractors' groups; local State and Federal minority business assistance offices or any other organization providing such assistance.

The above documentation shall remain in the contractor's files for a period of three (3) years after the completion of the project and be available for examination by the Iowa Economic Development Authority.

8. POSITIVE EFFORT DOCUMENTATION WHEN NO GOALS ARE ASSIGNED

Contractors are also required to make positive efforts in utilizing TSBs on all State-assisted projects which are not assigned goals. Form 730007, "TSB Pre-bid Contact Information" is required to be submitted with bids on all projects. If there is no TSB participation, then the contractor shall comply with section 7C of this document prior to the contract award. Form 730007 can be found here: https://iowadot.seamlessdocs.com/f/TargetedSmallBusinessTSBPrebidContactInfo

Form 730007WP 7-97

Contractor _____ Page#_____

Project# _____

County _____

City _____

TARGETED SMALL BUSINESS (TSB)
PRE-BID CONTACT INFORMATION

(To Be Completed By All Bidders per the Current Contract Provision)

In order for your bid to be considered responsive, you are required to provide information on this form showing your Targeted Small Business contacts made with your bid submission. This information is subject to verification and confirmation.

In the event it is determined that the Targeted Small Business goals are not met, then before awarding the contract, the Contracting Authority will make a determination as to whether or not the apparent successful low bidder made good faith efforts to meet the goals.

NOTE: Every effort shall be made to solicit quotes or bids on as many subcontractable items as necessary to achieve the established goals. If a TSB's quote is used in the bid, it is assumed that the firm listed will be used as a subcontractor.

TABLE OF INFORMATION SHOWING BIDDERS PRE-BID
TARGETED SMALL BUSINESS (TSB) CONTACTS

SUBCONTRACTOR	TSB	DATES CONTACTED	QUOTES RECEIVED		QUOTATION USED IN BID	
			YES/ NO	DATES CONTACTED	YES/ NO	DOLLAR AMT. PROPOSED TO BE SUBCONTRACTED

Total dollar amount proposed to be subcontracted to TSB on this project $_____.
List items by name to be subcontracted:

UTILIZATION OF TARGETED SMALL BUSINESS (TSB) ENTERPRISES ON NON-FEDERAL AID PROJECTS (THIRD-PARTY STATE-ASSISTED PROJECTS)

In accordance with Iowa Code Section 19B.7, it is the policy of the Iowa Department of Transportation (Iowa DOT) that Targeted Small Business (TSB) enterprises shall have the maximum practicable opportunity to participate in the performance of contracts financed in whole or part with State funds.

Under this policy the Recipient shall be responsible to make a positive effort to solicit bids or proposals from TSB firms and to utilize TSB firms as contractors or consultants. The Recipient shall also ensure that the contractors or consultants make positive efforts to utilize TSB firms as subcontractors, subconsultants, suppliers, or participants in the work covered by this agreement.

The Recipient's "positive efforts" shall include, but not be limited to:

1. Obtaining the names of qualified TSB firms from the Iowa Economic Development Authority (515-725-3132) or from its website at: https://www.iowa.gov/tsb/index.php/home.

2. Notifying qualified TSB firms of proposed projects involving State funding. Notification should be made in sufficient time to allow the TSB firms to participate effectively in the bidding or request for proposal (RFP) process.

3. Soliciting bids or proposals from qualified TSB firms on each project, and identifying for TSB firms the availability of subcontract work.

4. Considering establishment of a percentage goal for TSB participation in each contract that is a part of this project and for which State funds will be used. Contract goals may vary depending on the type of project, the subcontracting opportunities available, the type of service or supplies needed for the project, and the availability of qualified TSB firms in the area.

5. For construction contracts:

   a) Including in the bid proposals a contract provision titled "TSB Affirmative Action Responsibilities on Non-Federal Aid Projects (Third-Party State-Assisted Projects)" or a similar document developed by the Recipient. This contract provision is available on-line at:

      http://www.dot.state.ia.us/local_systems/publications/tsb_contract_provision.pdf

   b) Ensuring that the awarded contractor has and shall follow the contract provisions.

6. For consultant contracts:

   a) Identifying the TSB goal in the Request for Proposal (RFP), if one has been set.

   b) Ensuring that the selected consultant made a positive effort to meet the established TSB goal, if any. This should include obtaining documentation from the consultant that includes a list of TSB firms contacted; a list of TSB firms that responded with a subcontract proposal; and, if the consultant does not propose to use a TSB firm that submitted a subcontract proposal, an explanation why such a TSB firm will not be used.

The Recipient shall provide the Iowa DOT the following documentation:

1. Copies of correspondence and replies, and written notes of personal and/or telephone contacts with any TSB firms. Such documentation can be used to demonstrate the Recipient's positive efforts and it should be placed in the general project file.

2. Bidding proposals or RFPs noting established TSB goals, if any.

3. The attached "Checklist and Certification." This form shall be filled out upon completion of each project and forwarded to: Iowa Department of Transportation, Civil Rights Coordinator, Office of Employee Services, 800 Lincoln Way, Ames, IA 50010.

CHECKLIST AND CERTIFICATION

For the Utilization of Targeted Small Businesses (TSB)
On Non-Federal-aid Projects (Third-Party State-Assisted Projects)

Recipient: _____ Project Number: _____

County: _____ Agreement Number: _____

1. Were the names of qualified TSB firms obtained from the Iowa Department of Inspections and Appeals? ☐ YES ☐ NO

   If no, explain _____

2. Were qualified TSB firms notified of project? ☐ YES ☐ NO

   If yes, by ☐ letter, ☐ telephone, ☐ personal contact, or ☐ other (specify) _____

   If no, explain _____

3. Were bids or proposals solicited from qualified TSB firms? ☐ YES ☐ NO

   If no, explain_____

4. Was a goal or percentage established for TSB participation? ☐ YES ☐ NO

   If yes, what was the goal or percentage? _____

   If no, explain why not: _____

5. Did the prime contractor or consultant use positive efforts to utilize TSB firms on subcontracts? ☐ YES ☐ NO

   If no, what action was taken by Recipient? _____

   Is documentation in files? ☐ YES ☐ NO

6. What was the dollar amount reimbursed to the Recipient
   from the Iowa Department of Transportation? $_____
   What was the final project cost? $_____
   What was the dollar amount performed by TSB firms? $_____

   Name(s) and address(es) of the TSB firm(s)_____
   (Use additional sheets if necessary)

   Was the goal or percentage achieved? ☐ YES ☐ NO

   If no, explain _____

As the duly authorized representative of the Recipient, I hereby certify that the Recipient used positive efforts to utilize TSB firms as participants in the State-assisted contracts associated with this project.

_____
Title

_____ _____
Signature **Date**

IOWA | DOT

KIM REYNOLDS, GOVERNOR
ADAM GREGG, LT. GOVERNOR

SCOTT MARLER, IOWA DOT DIRECTOR
TROY JERMAN, IOWA DOT COO

IOWA DEPARTMENT OF TRANSPORTATION
Modal Transportation Bureau - Aviation
800 Lincoln Way
Ames, Iowa 50010
515-239-1048
www.iowadot.gov/aviation

September 5, 2024

Ankeny Regional Airport
Paul Moritz
410 W First Street
Ankeny, IA 50023

Dear Paul:

Congratulations! The FY 2025 General Aviation Vertical Infrastructure Program Application you submitted with the Iowa DOT was approved for funding by the Iowa Transportation Commission on August 13, 2024. The grant award is for **30%** of eligible costs up to a maximum state share of **$300000** for the following project: **Construct Box Hangars**.

Attached is a grant agreement between the airport sponsor and the Iowa DOT. The airport sponsor should review, sign, and email a signed copy to me. Hard copies are not required. **The airport sponsor has 90 days to sign the grant and return it to the Iowa DOT for our signature.** Any contracts not returned within the 90-day window may be canceled. Once received, the Iowa DOT will sign and return a fully executed contract to the sponsor. The airport sponsor is authorized to begin the project **after** receiving the contract with both Iowa DOT and Sponsor signatures in place.

Please review the agreement and note the Airport's responsibilities and assurances, required affirmative action, targeted small business and audit requirements. If the sponsor will be requesting reimbursement for engineering services, a copy of the agreement will need to be provided to the Iowa DOT. The Iowa DOT recommends that engineering agreements are either lump sum, or cost plus with fixed overhead rate and maximum dollar amount. Any engineering agreement more than $150,000 must have a pre-audit completed by the Iowa DOT. All engineering agreements that are paid with state funds are subject to a final audit. Please include state related nondiscrimination and targeted small business clauses in your agreements.

Stand-alone Iowa DOT grant administration expenses as part of the engineering agreement are not eligible for reimbursement. Project administration, closeout, and other related engineering costs remain eligible. Sponsors needing assistance on administration of these grants can reach out to our office directly.

A few important reminders as you prepare to get underway with the project:

- The project must be under obligation within 12 months.
- Please note that only expenses incurred on or after the Iowa DOT signature date on the agreement are eligible for reimbursement.
- Submit claims for reimbursement with copies of invoices, canceled checks or other documentation that the bills have been paid.
- Reimbursement requests should be made in the same fiscal year that the work is completed. Reimbursement for work done near the end of a state fiscal year (June 30) must be requested by August 1.
- A final acceptance form must be completed and submitted with the final claim for reimbursement. Required forms can be downloaded from the Aviation Web site at https://iowadot.gov/aviation/airport-managers-and-sponsors/forms.

If you have any questions regarding this information, please call me at 515-239-1048.

Good luck with your airport project!

Sincerely,

Shane Wright, C.M.
Program Manager

IOWA DEPARTMENT OF TRANSPORTATION
AGREEMENT
FOR THE FISCAL YEAR 2025
GENERAL AVIATION VERTICAL INFRASTRUCTURE PROGRAM (GAVI)

THIS AGREEMENT is made between the Iowa Department of Transportation called the "Iowa DOT" and **Polk County Aviation Authority**, hereafter the "SPONSOR".

1.00 PURPOSE: The purpose of this agreement is to set forth terms, conditions and obligations for accomplishment of certain improvements at the **Ankeny Regional Airport**, hereafter the "Airport".

Improvements shall consist of:
Construct Box Hangars, as more clearly defined in the project application.

It shall be referred to as the "Project" and shall be identified by
Project number: **9I250IKV300**
Contract number: **CNTRT-00007388**

2.0 GENERAL PROVISIONS

2.01 The SPONSOR shall have 90 days to sign and return this agreement or the Iowa DOT reserves the right to revoke this grant.

2.02 The SPONSOR shall have the project under contract no later than 12 months after the date of the agreement or the Iowa DOT reserves the right to revoke this grant.

2.03 The Iowa DOT agrees to reimburse the SPONSOR **30%** of the eligible project costs, not to exceed the maximum amount payable of **$300,000** incurred according to the terms of this agreement. Reimbursement will be made in whole dollar amounts only, rounded down. Final payment request may include documentation of unreimbursed amounts due to rounding. Final reimbursement will be made up to the contract amount in whole dollars.

2.04 All projects meeting the definition of public improvements shall follow the competitive bid and competitive quotation procedures for vertical infrastructure as identified in Chapter 26 of the Code of Iowa and 761 Iowa Administrative Code Chapter 180. (https://www.legis.iowa.gov/docs/iac/chapter/761.180.pdf)

- Competitive bid procedures for all projects greater than $196,000.
- Competitive quotation procedures for airport authorities and city sponsors with populations greater than 50,000 for projects between $109,000 and $196,000
- Competitive quotation procedures for airport authorities and city sponsors with population of 50,000 or less for projects between $81,000 and $196,000,
- Informal local procedures for projects less than the thresholds identified for competitive quotations.

The SPONSOR shall follow requirements of the Iowa Code Section 544A.18, 193B Iowa Administrative Code Chapter 5, Chapter 542B of the Code of Iowa, and 193C Administrative Code Chapter 1 to determine when professional engineering or architectural plans and specifications must be used. The SPONSOR shall submit any

plans, specifications and other contract documents to the Iowa DOT for its files.

2.05 Should the SPONSOR fail to comply with any Condition or Assurance provided herein, the Iowa DOT may withhold further payment and may require reimbursement of any or all payments made by the Iowa DOT toward accomplishment of the Project.

2.06 The Iowa DOT shall not waive any right of authority by making payments pursuant to this agreement, and such payments shall not constitute approval or acceptance of any part of the Project.

2.07 Neither the Department nor the Sponsor intend to create rights in, and shall not be liable to, any third parties by reason of this agreement.

2.08 If any provision of this agreement is held invalid, the remainder of this agreement shall not be affected thereby if such remainder would then continue to conform to applicable law and the intent of this agreement.

2.09 The Iowa DOT shall determine what costs charged to the project account are eligible for participation under the terms of this agreement and the SPONSOR shall bear all additional costs accepted and paid. Only those eligible costs incurred after this agreement is executed shall be reimbursed, unless the SPONSOR receives written notice from the Iowa DOT that the Sponsor has authority to incur costs.

2.10 Notwithstanding any other provisions of this agreement, the Iowa DOT shall have the right to enforce, and may require the SPONSOR to comply with, any and all Conditions and Assurances agreed to herein.

2.11 The Iowa DOT's obligations hereunder shall cease immediately, without penalty of further payment being required, in any year for which the General Assembly of the State of Iowa fails to make an appropriation or reappropriation to pay such obligations, and the Iowa DOT's obligations hereunder shall cease immediately without penalty of further payment being required at any time where there are not sufficient authorized funds lawfully available to the Iowa DOT to meet such obligations. The Iowa DOT shall give the SPONSOR notice of such termination of funding as soon as practicable after the Iowa DOT becomes aware of the failure of funding. In the event the Iowa DOT provides such notice, the SPONSOR may terminate this agreement or any part thereof.

2.12 The SPONSOR is the contracting agent and, as such, retains sole responsibility for compliance with local, state and federal laws and regulations related to accomplishment of the Project. The sponsor shall ensure compliance with Title VI of the Civil Rights Act of 1964, 78 STAT. 252, 42 U.S.C. 2000d-42 U.S.C. 2000d-4, and all requirements imposed by or pursuant to the end that no person in the United States shall, on the grounds of race, color, or national origin, be excluded from participation in, be denied the benefits of, or be otherwise subjected to discrimination under any program or activity receiving financial assistance from the Iowa DOT.

In accordance with Iowa Code Chapter 216, the SPONSOR shall not discriminate against any person on the basis of race, color, creed, age, sex, sexual orientation, gender identity, national origin, religion, pregnancy, or disability.

2.13 Funding will be available for reimbursement of the project for two years after the date of the agreement, unless appropriations are withdrawn under 2.11. Assurances in this agreement remain in full force and effect for a period of 20 years from the date of the agreement.

2.14 The SPONSOR agrees to indemnify, defend, and to hold the Iowa DOT harmless from any action or liability out of the design, construction, maintenance and inspection or use of this project. This agreement to indemnify, defend, and hold harmless applies to all aspects of the Iowa DOT's application review and approval process, plan and construction reviews, and funding participation.

2.15 In the case of any dispute concerning the terms of this agreement, the parties shall submit the matter to arbitration pursuant to the Iowa Code Chapter 679A. Either party has the right to submit the matter to arbitration after 10 days notice to the other party of the intent to seek arbitration. The written notice must include a precise statement of the dispute. The Iowa DOT and the SPONSOR agree to be bound by the decision of the appointed arbitrator. Neither party may seek any remedy with the State or Federal courts absent exhaustion of the provisions of this paragraph for arbitration.

2.16 Infrastructure and/or work products developed through this grant become the property of the SPONSOR and the SPONSOR's responsibility to maintain.

2.17 The attached Exhibit(s) will apply and are hereby made a part of this agreement:

- Exhibit A, "Utilization of Targeted Small Business (TSB) Enterprises on Non-Federal Aid Projects (Third-Party State Assisted Projects)"

2.18

3.00 PROJECT CONDITIONS

3.01 The SPONSOR Agrees to:

(a) Let contracts according to provisions of Chapter 26 of the Iowa Code and preside at all public hearings occasioned by the Project.

(b) Contract for all professional and construction services as needed, submitting a copy of any engineering/consultant contract to the Iowa DOT. If the engineering/consultant agreement is more than $150,000 and the sponsor will request state reimbursement for the engineering/consultant services, the agreement must be submitted to the Iowa DOT for pre-audit prior to execution of the agreement.

(c) Establish and maintain a project schedule and provide the schedule to the Iowa DOT.

(d) Obtain and provide the sales tax exemption certificates through the Iowa Department of Revenue and Finance to the successful bidder and any subcontractors to enable them to purchase qualifying materials for the project free of sales tax.

(e) Submit to the Iowa DOT a Request for Reimbursement form, copies of invoices, and proof of payment for reimbursement. Progress payments are allowed.

(f) Inspect work and equipment, test materials, and control construction to ensure that the design intent of the plans and specifications is achieved.

(g) Inform the Iowa DOT of construction completion and allow the Iowa DOT access to review the completed project.

(h) Certify satisfactory completion of the Project by resolution or signed final acceptance

form and provide a copy to the Iowa DOT.

(i) Retain all records relating to project cost, including supporting documents, for a period of three (3) years following final payment by the Iowa DOT, and to make such records and documents available to Iowa DOT personnel for audit.

(j) Ensure that applicable General Provisions and Project Conditions are included in any agreement between the SPONSOR and Engineer/Consultant.

4.00 SPECIAL PROVISIONS

4.01 The Project is for the sole purpose and use of aviation related activities and must be owned by the SPONSOR. The SPONSOR shall not lease airport space constructed with this grant to activities unrelated to aviation.

5.00 SPONSOR ASSURANCES

By authorizing execution of this agreement the SPONSOR hereby certifies that:

5.01 It will not enter into any transaction which would operate to deprive it of any of the rights and powers necessary to perform any or all of the assurances made herein, unless by such transaction the obligation to perform all such covenants are assumed by another public agency found by the Iowa DOT to be eligible under the laws of the State of Iowa to assume such obligations and to have the power, authority, and financial resources to carry out all such obligations. If an arrangement is made for the management or operation of the Airport by any agency or person other than the SPONSOR or an employee of the SPONSOR, the SPONSOR will reserve sufficient rights and authority to insure that the Airport will be operated and maintained in accordance with these assurances. The SPONSOR retains responsibility for compliance with these assurances and all other provisions of this agreement, regardless of any arrangement for management or operation of the airport.

5.02 It will not dispose of or encumber its title or other interests in the site and facilities during the 20-year period of this agreement.

5.03 It will operate and maintain in a safe and serviceable condition the Airport and all facilities thereon and connected therewith which are necessary to service the aeronautical users of the Airport and will not permit any activity thereon which would interfere with its use for airport purposes.

5.04 Insofar as it is within its power and reasonable, the Sponsor will, either by the acquisition and retention of easements or other interests in or rights for the use of land or airspace and by the adoption and enforcement of zoning regulations, prevent the construction, erection, alteration, or growth of any structure, tree, or other object in the approach areas of the runways of the Airport, which would constitute an obstruction to air navigation according to the criteria or standards prescribed in Section 77.23 as applied to Section 77.25, Part 77, of the Federal Aviation Regulations. In addition, the Sponsor will not erect or permit the erection of any permanent structure or facility that would interfere materially with the use, operation, or future development of the Airport, or any portion of a runway approach area in which the Sponsor has acquired, or hereafter acquires.

5.05 It will operate and maintain the facility in accordance with the minimum standards as

may be required or prescribed by the Iowa DOT for the maintenance and operation of such facilities as identified in the Iowa Administrative Code 761-Chapter 720.10.

5.06 It will operate the Airport as such for the use and benefits of the public. In furtherance of this covenant (but without limiting its general applicability and effect), the SPONSOR specifically agrees that it will keep the Airport open to all types, kinds, and classes of aeronautical use on fair and reasonable terms without unlawful discrimination between such types, kinds, and classes. The SPONSOR may establish such fair, equal, and not unjustly discriminatory conditions to be met by all users of the Airport as may be necessary for the safe and efficient operation of the airport. The SPONSOR may also prohibit or limit any given type, kind or class of aeronautical use of the Airport if such action is necessary for the safe operation of the airport or necessary to serve the civil aviation needs of the public. It will operate the Airport on fair and reasonable terms, and without unjust discrimination.

5.07 The SPONSOR will keep up-to-date and provide to the Iowa DOT an airport layout plan. The SPONSOR will not make or permit the making of any changes or alterations in the Airport or any of its facilities other than in conformity with the airport layout plan, if such changes or alterations might adversely affect the safety, utility, or efficiency of the Airport.

6.00 EXECUTION OF THE AGREEMENT. By resolution made a part of this agreement the SPONSOR authorized the undersigned to execute this agreement.

Signed this _____ day of _____, _____, on behalf of the SPONSOR.

By: _____ Attested: _____

Title: _____ Title: _____

Signed this _____ day of _____, _____, on behalf of the Iowa Department of Transportation.

By: _____
Tamara Nicholson
Director
Modal Transportation Bureau

Exhibit A

CONTRACT PROVISION

Targeted Small Business (TSB) Affirmative Action Responsibilities

on

Non-Federal Aid Projects (Third-Party State-Assisted Projects)

October 2023

1. TSB DEFINITION

A TSB is a small business, as defined by Iowa Code Section 15.102(10), which is 51% or more owned, operated and actively managed by one or more women, minority persons, service-disabled veterans or persons with a disability provided the business meets all of the following requirements: is located in this state, is operated for profit and has an annual gross income of less than 4 million dollars computed as an average of the three preceding fiscal years.

2. TSB REQUIREMENTS

In all State-assisted projects made available through the Iowa Department of Transportation, local governments have certain affirmative action requirements to encourage and increase participation of disadvantaged individuals in business enterprises. These requirements are based on Iowa Code Section 19B.7. These requirements supersede all existing TSB regulations, orders, circulars, and administrative requirements.

3. TSB DIRECTORY INFORMATION

Available from: Iowa Economic Development Authority Targeted Small Business Certification Program 1963 Bell Ave.

Suite 200

Des Moines, IA 50315 Phone: (515-348-6193)

Website: https://www.iowaeda.com/small-business/targeted-small-business/

4. THE CONTRACTOR'S TSB POLICY

The contractor is expected to promote participation of disadvantaged business enterprises as suppliers, manufactures and subcontractors through a continuous, positive, result-oriented program. Therefore, the contractor's TSB policy shall be:

> It is the policy of this firm that Targeted Small Business (TSB) concerns shall have the maximum practical opportunity to participate in contracts funded with State-assisted funds which are administered by this firm (e.g. suppliers, manufacturers and subcontractors). The purpose of our policy is to encourage and increase the TSB participation in contracting opportunities made available by State-assisted programs.

5. CONTRACTORS SHALL APPOINT AN EQUAL EMPLOYMENT OPPORTUNITY (EEO) OFFICER

The contractor shall designate a responsible person to serve as TSB officer to fulfill the contractors affirmative action responsibilities. This person shall have the necessary statistics, funding, authority, and responsibility to carry out and enforce the firm's EEO policy. The EEO officer shall be responsible for developing, managing, and implementing the program on a day-to-day basis. The officer shall also:

A. For current TSB information, contact the Iowa Economic Development Authority (515-348-6193) to identify potential material suppliers, manufacturers, and contractors.

A. Make every reasonable effort to involve TSBs by soliciting quotations from them and incorporating them into the firm's bid.

B. Make every reasonable effort to establish systematic written and verbal contact with those TSBs having the materials or expertise to perform the work to be subcontracted, at least two weeks prior to the time quotations are submitted. Maintain complete records of negotiations efforts.

C. Provide or arrange for assistance to TSBs in seeking bonding, analyzing plans/specifications or other actions that can be viewed as technical assistance.

D. Ensure the scheduled progress payments are made to TSBs as agreed in subcontract agreements.

E. Require all subcontractors and material suppliers to comply with all contract equal opportunity and affirmative action provisions.

6. COUNTING TSBs PARTICIPATION ON A PROJECT

TSBs are to assume actual and contractual responsibilities for provision of materials/supplies, subcontracted work, or other commercially useful function.

A. The bidder may count:

1) Planned expenditures for materials/supplies to be obtained from TSB suppliers and manufacturers; or
2) Work to be subcontracted to a TSB; or
3) Any other commercially useful function.

B. The contractor may count:

1) 100% of an expenditure to a TSB manufacturer that produces/supplies goods manufactured from raw materials.
2) 60% of an expenditure to TSB suppliers that are not manufacturers; provided the suppliers perform a commercially useful function in the supply process.
3) Only those expenditures to TSBs that perform a commercially useful function in the work of a contract, including those as a subcontractor.
4) Work the Contracting Authority has determined that it involves a commercially useful function. The TSB must have a necessary and useful role in the transaction of a kind for which there is a market outside the context of the TSB program. For example, leasing equipment or purchasing materials from prime contractor would not count.

7. REQUIRED DATA, DOCUMENTS AND CONTRACT AWARD PROCEDURES FROM BIDDERS/CONTRACTORS FOR PROJECTS WITH ASSIGNED GOALS

A. Bidders

Bidders who fail to demonstrate reasonable positive efforts may be declared ineligible to be awarded the contract. Bidders shall complete the bidding documents plus a separate form called "TSB Pre-Bid Contact Information". This form includes:

1) Name(s) of the TSB(s) contacted regarding subcontractable items.
2) Date of the contract.
3) Whether or not a TSB bid/quotation was received.
4) Whether or not the TSB's bid/quotation was used.
5) The dollar amount proposed to be subcontracted.

B. Contractors Using Quotes From TSBs

Use those TSBs whose quotes are listed in the "Quotation Used in Bid" column along with a "yes" indicated on the Pre- BID Contract Information Form.

C. Contractors NOT Using Quotes From TSBs

If there are no TSBs listed on the Pre-bid Contact Information Form, then the contractor shall document all efforts made to include TSB participation in this project by documenting the following:

1) What pre-solicitation or pre-bid meetings scheduled by the contracting authority were attended?
2) Which general news circulation, trade associations and/or minority-focused media were advertised concerning the subcontracting opportunities?
3) Were written notices sent to TSBs that TSBs were being solicited and was sufficient time allowed for the TSBs to participate effectively?
4) Were initial solicitations of interested TSBs followed up?
5) Were TSBs provided with adequate information about the plans, specifications, and requirements of the contract?
6) Were interested TSBs negotiated with in good faith? If a TSB was rejected as unqualified, was the decision based on an investigation of their capabilities?
7) Were interested TSBs assisted in obtaining bonding, lines of credit or insurance required by the contractor?
8) Were services used of minority community organization, minority contractors' groups; local State and Federal minority business assistance offices or any other organization providing such assistance.

The above documentation shall remain in the contractor's files for a period of three (3) years after the completion of the project and be available for examination by the Iowa Economic Development Authority.

8. POSITIVE EFFORT DOCUMENTATION WHEN NO GOALS ARE ASSIGNED

Contractors are also required to make positive efforts in utilizing TSBs on all State-assisted projects which are not assigned goals. Form 730007, "TSB Pre-bid Contact Information" is required to be submitted with bids on all projects. If there is no TSB participation, then the contractor shall comply with section 7C of this document prior to the contract award. Form 730007 can be found here: https://iowadot.seamlessdocs.com/f/TargetedSmallBusinessTSBPrebidContactInfo

Form 730007WP 7-97

Contractor _____ Page#_____

Project# _____

County _____

City _____

TARGETED SMALL BUSINESS (TSB)
PRE-BID CONTACT INFORMATION

(To Be Completed By All Bidders per the Current Contract Provision)

In order for your bid to be considered responsive, you are required to provide information on this form showing your Targeted Small Business contacts made with your bid submission. This information is subject to verification and confirmation.

In the event it is determined that the Targeted Small Business goals are not met, then before awarding the contract, the Contracting Authority will make a determination as to whether or not the apparent successful low bidder made good faith efforts to meet the goals.

NOTE: Every effort shall be made to solicit quotes or bids on as many subcontractable items as necessary to achieve the established goals. If a TSB's quote is used in the bid, it is assumed that the firm listed will be used as a subcontractor.

TABLE OF INFORMATION SHOWING BIDDERS PRE-BID
TARGETED SMALL BUSINESS (TSB) CONTACTS

SUBCONTRACTOR	TSB	DATES CONTACTED	QUOTES RECEIVED		QUOTATION USED IN BID	
			YES/ NO	DATES CONTACTED	YES/ NO	DOLLAR AMT. PROPOSED TO BE SUBCONTRACTED

Total dollar amount proposed to be subcontracted to TSB on this project $_____.
List items by name to be subcontracted:

UTILIZATION OF TARGETED SMALL BUSINESS (TSB) ENTERPRISES ON NON-FEDERAL AID PROJECTS (THIRD-PARTY STATE-ASSISTED PROJECTS)

In accordance with Iowa Code Section 19B.7, it is the policy of the Iowa Department of Transportation (Iowa DOT) that Targeted Small Business (TSB) enterprises shall have the maximum practicable opportunity to participate in the performance of contracts financed in whole or part with State funds.

Under this policy the Recipient shall be responsible to make a positive effort to solicit bids or proposals from TSB firms and to utilize TSB firms as contractors or consultants. The Recipient shall also ensure that the contractors or consultants make positive efforts to utilize TSB firms as subcontractors, subconsultants, suppliers, or participants in the work covered by this agreement.

The Recipient's "positive efforts" shall include, but not be limited to:

1. Obtaining the names of qualified TSB firms from the Iowa Economic Development Authority (515-725-3132) or from its website at: https://www.iowa.gov/tsb/index.php/home.

2. Notifying qualified TSB firms of proposed projects involving State funding. Notification should be made in sufficient time to allow the TSB firms to participate effectively in the bidding or request for proposal (RFP) process.

3. Soliciting bids or proposals from qualified TSB firms on each project, and identifying for TSB firms the availability of subcontract work.

4. Considering establishment of a percentage goal for TSB participation in each contract that is a part of this project and for which State funds will be used. Contract goals may vary depending on the type of project, the subcontracting opportunities available, the type of service or supplies needed for the project, and the availability of qualified TSB firms in the area.

5. For construction contracts:

   a) Including in the bid proposals a contract provision titled "TSB Affirmative Action Responsibilities on Non-Federal Aid Projects (Third-Party State-Assisted Projects)" or a similar document developed by the Recipient. This contract provision is available on-line at:

      http://www.dot.state.ia.us/local_systems/publications/tsb_contract_provision.pdf

   b) Ensuring that the awarded contractor has and shall follow the contract provisions.

6. For consultant contracts:

   a) Identifying the TSB goal in the Request for Proposal (RFP), if one has been set.

   b) Ensuring that the selected consultant made a positive effort to meet the established TSB goal, if any. This should include obtaining documentation from the consultant that includes a list of TSB firms contacted; a list of TSB firms that responded with a subcontract proposal; and, if the consultant does not propose to use a TSB firm that submitted a subcontract proposal, an explanation why such a TSB firm will not be used.

The Recipient shall provide the Iowa DOT the following documentation:

1. Copies of correspondence and replies, and written notes of personal and/or telephone contacts with any TSB firms. Such documentation can be used to demonstrate the Recipient's positive efforts and it should be placed in the general project file.

2. Bidding proposals or RFPs noting established TSB goals, if any.

3. The attached "Checklist and Certification." This form shall be filled out upon completion of each project and forwarded to: Iowa Department of Transportation, Civil Rights Coordinator, Office of Employee Services, 800 Lincoln Way, Ames, IA 50010.

CHECKLIST AND CERTIFICATION

For the Utilization of Targeted Small Businesses (TSB)
On Non-Federal-aid Projects (Third-Party State-Assisted Projects)

Recipient: _____ Project Number: _____

County: _____ Agreement Number: _____

1. Were the names of qualified TSB firms obtained from the Iowa Department of Inspections and Appeals? ☐ YES ☐ NO

   If no, explain _____

2. Were qualified TSB firms notified of project? ☐ YES ☐ NO

   If yes, by ☐ letter, ☐ telephone, ☐ personal contact, or ☐ other (specify) _____

   If no, explain _____

3. Were bids or proposals solicited from qualified TSB firms? ☐ YES ☐ NO

   If no, explain_____

4. Was a goal or percentage established for TSB participation? ☐ YES ☐ NO

   If yes, what was the goal or percentage? _____

   If no, explain why not: _____

5. Did the prime contractor or consultant use positive efforts to utilize TSB firms on subcontracts? ☐ YES ☐ NO

   If no, what action was taken by Recipient? _____

   Is documentation in files? ☐ YES ☐ NO

6. What was the dollar amount reimbursed to the Recipient
   from the Iowa Department of Transportation? $_____
   What was the final project cost? $_____
   What was the dollar amount performed by TSB firms? $_____

   Name(s) and address(es) of the TSB firm(s)_____
   (Use additional sheets if necessary)

   Was the goal or percentage achieved? ☐ YES ☐ NO

   If no, explain _____

As the duly authorized representative of the Recipient, I hereby certify that the Recipient used positive efforts to utilize TSB firms as participants in the State-assisted contracts associated with this project.

_____
Title

_____ _____
Signature **Date**

RESOLUTION 2024-

A RESOLUTION AUTHORIZING THE EXECUTION OF TASK ORDER 07 FOR DESIGN AND BIDDING SERVICES WITH McCLURE ENGINEERING FOR THE NORTH PROPERTY LINE BOX HANGARS - PHASE 2 PROJECT

WHEREAS, the Polk County Aviation Authority is responsible for the maintenance and expansion of the facilities at the Ankeny Regional Airport, including runways, taxiways and ramp areas and

WHEREAS, the PCAA Board acknowledges the need for additional box hangars at the Ankeny Regional Airport, and

WHEREAS, the PCAA is developing the North Property Line Box Hangars Project to address the need for additional box hangars at the Ankeny Regional Airport, and

WHEREAS, the PCAA will be receiving Iowa DOT AIP and GAVI grants from the Iowa Department of Transportation to partially fund the second phase of the said project, and

WHEREAS, McClure Engineering Company has prepared Task Order No. 07 which establishes the scope of the design and bidding services needed to engineer the North Property Line Box Hangars – Phase 2 project in an amount not to exceed $163,228.

NOW, THEREFORE, BE IT RESOLVED, that the Polk County Aviation Authority approves Task Order No. 07 for the North Property Line Box Hangars – Phase 2 Project, and further authorizes the Chairperson to sign the said task order.

Dated at Ankeny, Iowa, this 10th day of October, 2024.

_____
Jeff Wangsness, Chairperson

ATTEST:

_____
Diane Klemme, Recording Secretary

Project No.: 2022001042-008
Project Name: North Property Line Box Hangars (Site Work and Vertical Infrastructure) - Phase 2
Ankeny Regional Airport (IKV)
Project Manager: Austin J. Moran, P.E.

TASK ORDER NO. 07
AGREEMENT FOR ENGINEERING SERVICES
NORTH PROPERTY LINE BOX HANGARS (AIP SITE WORK AND GAVI VERTICAL INFRASTRUCTURE) - PHASE 2
ANKENY REGIONAL AIRPORT
ANKENY, IOWA
IOWA DOT PROJECT NO. 9I250IKV100 (AIP)
IOWA DOT PROJECT NO. 9I250IKV300 (GAVI)

This **TASK ORDER NO. 07**, made on the _____ day of _____, 2024, under the terms and conditions established in the **MASTER AGREEMENT**, dated the 6th day of October, 2022, by and between **McClure of Clive, IA** (herein referred to as "**Consultant**") and the **Polk County Aviation Authority (PCAA)** (hereinafter referred to as "**Owner**"). Services shall be performed per the fees, terms and conditions outlined in this Task Order. The **Consultant** shall provide engineering services at the request of the **Owner** which consists of the items listed below, located at the **Ankeny Regional Airport (IKV)**.

PROJECT DESCRIPTION:

DESIGN AND BIDDING SERVICES
NORTH PROPERTY LINE BOX HANGARS (AIP SITE WORK AND GAVI VERTICAL INFRASTRUCTURE) - PHASE 2
ANKENY REGIONAL AIRPORT, ANKENY, IOWA

1. The **Owner** shall provide information, which shall set forth the **Owner's** objectives, schedule, constraints, budget with reasonable contingencies and other applicable criteria. (See Exhibit 'E' for **Owner's** responsibilities).
2. The **Consultant** shall provide the following services, including:

Part I: Design and Bidding Services for both AIP and GAVI Services

Item	Included	Not Included
100. Airport Master Planning and Reports		
1. Preliminary Planning and Reports		X
2. Project Concepts		X
3. Capital Improvements Plan		X
4. Evaluation of Alternatives for Improvement		X
5. Master Planning Design/Concepts		X
200. Existing Conditions		
1. Data Gathering/Inventory	X	
2. Existing Condition Drawings	X	
3. Storm Sewer Televising		X
4. Geographical Information Systems		X
5. Environmental Assessment - CATEX		X
6. Airspace Obstruction Survey		X
300. Iowa DOT Grant Administration		
1. Establish and Maintain Project Schedule	X	
2. Prepare AIP Payment Summary & assist Owner with Iowa DOT reimbursement requests (monthly)	X	
3. Prepare GAVI Payment Summary & assist Owner with Iowa DOT reimbursement requests (monthly)	X	
4. Prepare Iowa DOT Statement of Completion for Airport Projects - AIP Grant	X	
5. Prepare Iowa DOT Statement of Completion for Airport Projects - GAVI Grant	X	
6. Iowa DOT Targeted Small Business Program Project Administration	X	
400. Preliminary Design		
1. Conduct Project Kickoff Meeting via teleconference. Prepare agenda and distribute minutes.	X	
2. Confirm Scope, Extent and Character of the Project:		
• Final Design Criteria	X	
• Field Survey to Determine Existing Conditions	X	
• Pre-trip preparation	X	
• Post trip processing	X	
• Develop Construction Item List	X	
• Review Project Questions and Issues	X	
• Coordinate Building Layouts	X	
• Operation and Maintenance Concepts	X	
• Utility Requirements	X	
• Project Limits Exhibit	X	
3. Preliminary/Conceptual Layout	X	
435. Soil Boring Coordination		
1. Prepare Geotechnical Scope of Work and submit to Geotechnical Firm		X
2. Review Geotechnical Scope/Fee Proposal and coordinate contract approval with Owner		X
3. Coordinate field exploration with Owner		X
4. Review Geotechnical Results and provide comments		X

Item	Included	Not Included
500. Final Design		
A. *30% Design Phase*		X
B. *90% Design Phase*		
1. Perform Airfield Pavement Design	X	
2. Perform Airfield Utility Coordination and Design - Electric	X	
3. Perform Stormwater Design	X	
4. Perform Full Frost Foundation Design and Details	X	
5. Prepare 90% Project Drawings	X	
6. Prepare 90% Specifications	X	
7. Prepare 90% Detailed Construction Schedule	X	
8. Prepare 90% Engineering Design Report (EDR)		X
9. Prepare 90% "Opinion of Probable Costs" and Project Budget	X	
10. Perform 90% QA/QC by Senior Airport Engineer	X	
11. Furnish 90% Documents in accordance with **Exhibit G**	X	
12. Conduct 90% Review Meeting with Client on-site with 90% Plans and Specifications. Prepare agenda and distribute minutes	X	
13. Prepare Draft and Final CSPP Document		X
C. *Issued for Bid (IFB) Package (100% Phase)*		
1. Formally Address Owner's 90% Comments	X	
2. Prepare IFB (100%) Drawings, Specifications, and Bid Documents	X	
3. Conduct Field Review of Plans and Specifications with Client on-site.	X	
4. Furnish IFB (100%) Documents	X	
504. Construction Permits		
1. Erosion Control Plan/Permit		
• Apply for NPDES Permit from DNR (Owner will be operator listed on permit). Consultant will not be liable for fines arising from		X
noncompliance with SWPPP. The Owner shall be the Permit holder and shall pay for all costs associated with permit.		
• Prepare Storm Water Pollution Prevention Plan (SWPPP)		X
2. Assist Sponsor in Preparation of City Permits	X	
3. Assist Sponsor with the Site Plan Approval Process (includes attending 1 meeting)	X	
4. Address Site Plan Comments and Concerns. Prepare for Resubmittal.	X	
5. Assist Sponsor with Building Permit Review Process	X	
6. Other Permits (USACE, Section 404 Permit)		X
7. File and submit FAA OE/AAA Case Study		
• FAA Obstruction Evaluation/Airport Airspace Analysis (OE/AAA) Form	X	
602. Advertising, Bidding, Contract Award		
1. Assist Owner in advertising for and obtaining bids	X	
2. Conduct Prebid Conference at Owner's Location (1 meeting). Prepare agenda and minutes.	X	
3. Provide Drawings, Specifications, and Bid Documents.	X	
4. Issue Addenda to interpret or clarify bid documents	X	
5. Respond to Bidders questions at discretion of Owner.	X	
6. Conduct Bid opening (online via QuestCDN) (1 Bid opening)	X	
7. Prepare Bid Tabulation	X	
8. Review Bidders quals, bids, and other documents. Make recommendation for award of contract.	X	
9. Distribute Executed Construction Contracts		
• Up to 3 Copies to Contractor	X	
• 2 Copies to Owner	X	
• 1 Copy to Iowa DOT (PDF)	X	
• 1 Copy to Consultant	X	
700. Topographic Survey		
1. Research existing survey control network system	X	
2. Establish bearings of centerlines as shown in **Exhibit G**	X	
3. Locate standard topographic features, within the survey limits as shown in **Exhibit G**.	X	
4. Collect Cross Sections, every 50', within the project limits		X
5. Collect joint intersections on taxilane within the project limits as shown in **Exhibit G**.	X	
6. Perform topographic survey in turf areas within the survey limits as shown in **Exhibit G**.	X	
7. Process Survey Work into AutoCAD topographic base files	X	

Item	Included	Not Included
850. Project Management and Coordination		
1. Continual Communication/Coordination with Owner, Airport, Iowa DOT (phone, email, letters)	X	
2. Provide updates on project schedule (assume 9 months)	X	
3. Provide monthly progress reports to Owner (assume 9 months)	X	
4. Maintain documentation of pertinent correspondence (email, letters, telephone logs)	X	
5. Prepare independent fee analysis package		X
6. Perform business and contract administration (assume 9 months)	X	
7. Conduct internal design review meetings (3-people prior to 90% submittal)	X	
8. Coordination between sub-consultant(s)	X	
9. Other Meetings		
• Special meetings with Council/Staff/Authority		X
• Public Informational Meetings		X
• Regulatory Agencies		X
960. Subconsultants		
1. Mechanical, Electrical, Plumbing Engineering (provided by Bluestone Engineering, LLC)		
a. Miscellaneous Design Services:		
• Specifications outlining equipment and installation requirements.	X	
• Plan certification as required by the State of Iowa.	X	
• State of Iowa Energy Code review and certification as required.	X	
• Design and user group meetings during the design phase:		
i. One (1) meeting to be conducted on site	X	
ii. Two (2) meetings via conference call or video conference	X	
b. Miscellaneous Design Services:		
• Autodesk Revit will be used as the primary design and documentation software for this project.	X	
• Based on Model Progression Specification (MPS) outlined in AIA Document E202-2008, Bluestone Engineering will create an approximate Level of Detail (LOD) 200 model at the completion of the Design Development phase and an approximate LOD 300 model for the generation of Construction Documents.	X	
• The Bluestone Engineering model for this project shall include the following disciplines:	X	
i. Mechanical	X	
ii. Plumbing	X	
iii. Electrical	X	
• Model elements are required to contain the necessary intelligence to produce coordinated plans, elevations, and sections.		
• Model elements are not required to be based off of a specific	X	
• Model will be created using the latest release of Autodesk Revit.	X	
• Construction documents will be delivered as PDF files.	X	
• Details may be created within the model or with AutoCAD.	X	
• Schedules may be created within the model or with Microsoft Excel or other third-party software providers.	X	
c. HVAC Design Services:		
• Heating consisting of in floor radiant heat (or alternate heat type) with a Low Velocity/High Volume fan in each.		X
• Toilet exhaust		X
d. Plumbing/Piping Design Services:		
• Domestic hot and cold water for restroom and exterior hose bibs		X
• Sanitary drainage and venting for the restroom		X
• Natural gas distribution for infloor heating boilers and restroom water heater		X
• Sand and oil interceptors		X
e. Electrical Design Services:		
• New electrical services (including utility coordination and service equipment layout, as well as grounding design)	X	
• Power distribution design within the hangars	X	
• Equipment connections and device layout	X	
• Interior lighting and controls	X	
• Building mounted exterior lighting and controls	X	
f. Bidding Phase Services:		
• Respond to contractor questions	X	
• Prepare addenda information as required	X	
• Assist with bid evaluation if requested	X	
2. Architectural (provided by OPN Architects)		
a. Review of architectural drawings for conformance with IBC 2015. Provide comments to designer.	X	
b. Perform fire wall design for pre-engineered steel in order to satisfy Building Codes. McClure will provide CAD support.	X	
c. Review and provide comments on project drawings and specifications.	X	
d. Assist with answering questions and negotiations during bidding.	X	
3. Exclusions:		
1. Security, including, CTV, burglary, and access control		X
2. Fire protection design		X
3. Energy modeling and utility cost analysis		X
4. Electric coordination and arc flash studies		X
5. Telecommunications		X
6. Seal architectural drawings and specification		X

3. Payment to the **Consultant** shall be made on the following basis:

Section 3.1: Basis of Compensation

Part I: AIP Site Work Design and Bidding Services

3.1.1 For performing the Services identified within Part I, the **Owner** shall pay the **Consultant** a lump sum amount in accordance with the following:

	Item	Description			
	100.	Airport Master Planning and Reports	Lump Sum	$	
X	*200.*	Existing Conditions	Lump Sum	$	1,364.00
X	*300.*	Iowa DOT Grant Administration	Lump Sum	$	639.00
X	*400.*	Preliminary Design	Lump Sum	$	4,005.00
	435.	Soil Boring Coordination	Lump Sum	$	
X	*500.*	Final Design	Lump Sum	$	
		A. 30% Design	Lump Sum	$	
		B. 90% Design	Lump Sum	$	9,150.00
		C. Issued for Bid (100%)	Lump Sum	$	2,499.00
X	*504.*	Construction Permits	Lump Sum	$	6,265.00
X	*602.*	Advertise, Bidding, Contract Award	Lump Sum	$	5,535.00
X	*700.*	Topographic Survey	Lump Sum	$	2,774.00
X	*850.*	Project Management and Coordination	Lump Sum	$	6,142.00
	960.	Subconsultants	Lump Sum	$	
			Part I: Subtotal	**$**	**38,373.00**

Part II: GAVI Vertical Infrastructure Design and Bidding Services

3.1.2 For performing the Services identified within Part II, the **Owner** shall pay the **Consultant** a lump sum amount in accordance with the following:

	Item	Description			
	100.	Airport Master Planning and Reports	Lump Sum	$	
X	*200.*	Existing Conditions	Lump Sum	$	1,364.00
X	*300.*	Iowa DOT Grant Administration	Lump Sum	$	639.00
	400.	Preliminary Design	Lump Sum	$	
	435.	Soil Boring Coordination	Lump Sum	$	
X	*500.*	Final Design	Lump Sum	$	
		A. 30% Design	Lump Sum	$	
		B. 90% Design	Lump Sum	$	22,154.00
		C. Issued for Bid (100%)	Lump Sum	$	8,270.00
X	*504.*	Construction Permits	Lump Sum	$	6,544.00
X	*602.*	Advertise, Bidding, Contract Award	Lump Sum	$	5,535.00
X	*700.*	Topographic Survey	Lump Sum	$	2,774.00
X	*850.*	Project Management and Coordination	Lump Sum	$	6,142.00
X	*960.*	Subconsultants (Bluestone Engineering, LLC and OPN Architects)	Lump Sum	$	33,060.00
			Part II: Subtotal		**86,482.00**
TOTALS:			**Parts I & II: Total**		**124,855.00**

3.1.3 The lump sum includes compensation for the Services, Subconsultant costs, if any, and appropriate factors for labor, overhead, profit, and Reimbursable Expenses.

3.1.4 Although the **Consultant** recognizes and accepts the ordinary risks and/or benefits of a lump sum fee structure, the parties agree to negotiate an adjustment of the lump sum amount if there has been, or is to be, a material change in the: (a) scope, complexity or character of the Services or the Project; (b) conditions under which the Services are required to be performed; or (c) duration of the Services, if a change in the Schedule warrants such adjustment in accordance with the terms of this Agreement.

Section 3.2: Additional Services

3.2.1 Any services rendered by the **Consultant** beyond those described in the Scope of Services shall be compensated on a lump sum basis as set forth in Section 3.1.

3.2.2 The **Consultant's** estimate of the amount that will become payable for Additional Services is only an estimate. If it becomes apparent that this estimated compensation amount will be exceeded, the **Consultant** and **Owner** shall mutually negotiate in writing to additional compensation exceeding said estimated amount.

Section 3.3: Other Payment Provisions

3.3.1 Progress Payments: Payment to the **Consultant** shall be made on a monthly basis, within 30 days of invoice for work completed to date. Amounts unpaid 30 days after invoice date shall bear interest from the date payment is due at a rate of 1.5% per month compounded and shall include costs for attorney fees and other collection fees related to collecting fees for service. The amounts due for Additional Services will also be invoiced monthly.

3.3.2 Reimbursable Expense Definition: Reimbursable expenses include, but are not limited to, transportation, subsistence, reproduction of reports, drawings, specifications, and other Project documents, courier services, materials, supplies, equipment rental and other costs specific to the Project.

4. This Agreement represents the entire and integrated Agreement between the **OWNER** and the **CONSULTANT**.

		Included	Not Included
Exhibit 'A'	Consultant Terms and Conditions Standard Agreement		x
Exhibit 'B'	Hourly Rate Schedule		x
Exhibit 'C'	Detailed Scope of Work		x
Exhibit 'D'	Subconsultant(s) Contract		x
Exhibit 'E'	Owner's Responsibilities to Consultant	x	
Exhibit 'F'	Duties and Responsibilities of Resident Project Representative (RPR)		x
Exhibit 'G'	Project Exhibit / CIP Data Sheet / List of Drawings, Specifications, Deliverables	x	
Exhibit 'H'	Opinion of Probable Cost	x	
Exhibit 'I'	Federal Provisions		x

SPECIAL INSTRUCTIONS:

OWNER: **Polk County Aviation Authority**
Ankeny, Iowa

By:

Name:

Title:

ENIGNEER: **McClure**
Clive, Iowa

By:

Name: Austin J. Moran, P.E.

Title: Project Manager

EXHIBIT E

McCLURE ENGINEERING COMPANY
OWNER'S RESPONSIBILITIES

OWNER shall do the following in a timely manner so as not to delay the services of the CONSULTANT:

1. Designate in writing a person to act, as OWNER'S representative with respect to the services to be rendered under this Agreement. Such person shall have complete authority to transmit instructions, receive information, interpret and define OWNER'S policies and decisions with respect to CONSULTANT'S services for the Project.

2. Provide all criteria and full information as to OWNER'S requirements for the Project, including design objectives and constraints, space, capacity and performance requirements, flexibility and expendability, and any budgetary limitations; and furnish copies of all design and construction standards, which OWNER will require to be included in the drawings and specifications.

3. Assist CONSULTANT by placing at CONSULTANT'S disposal all available information pertinent to the Project including previous reports and any other data relative to design or construction of the Project.

4. Arrange for access to make all provisions for CONSULTANT to enter upon public and private property as required for CONSULTANT to perform services under this Agreement.

5. Examine all studies, reports, sketches, drawings, specifications, proposals and other documents presented by CONSULTANT, obtain advice of an attorney, insurance counselor and other consultants as OWNER deems appropriate for such examination and render in writing decisions pertaining thereto within a reasonable time so as not to delay the services of CONSULTANT.

6. Furnish approvals and permits from all governmental authorities having jurisdiction over the Project and such approvals and consents from others as may be necessary for completion of the Project.

7. Attend the prebid conference, bid opening, preconstruction conferences, construction progress and other job related meetings and substantial completion inspection and final payment inspection.

8. Give prompt written notice to CONSULTANT whenever OWNER observes or otherwise becomes aware of any development that affects the scope or timing of CONSULTANT'S services, or any defect or non-conformance in the work of any Contractor.

9. Arrange for financing and pay for services as agreed to in this Agreement.

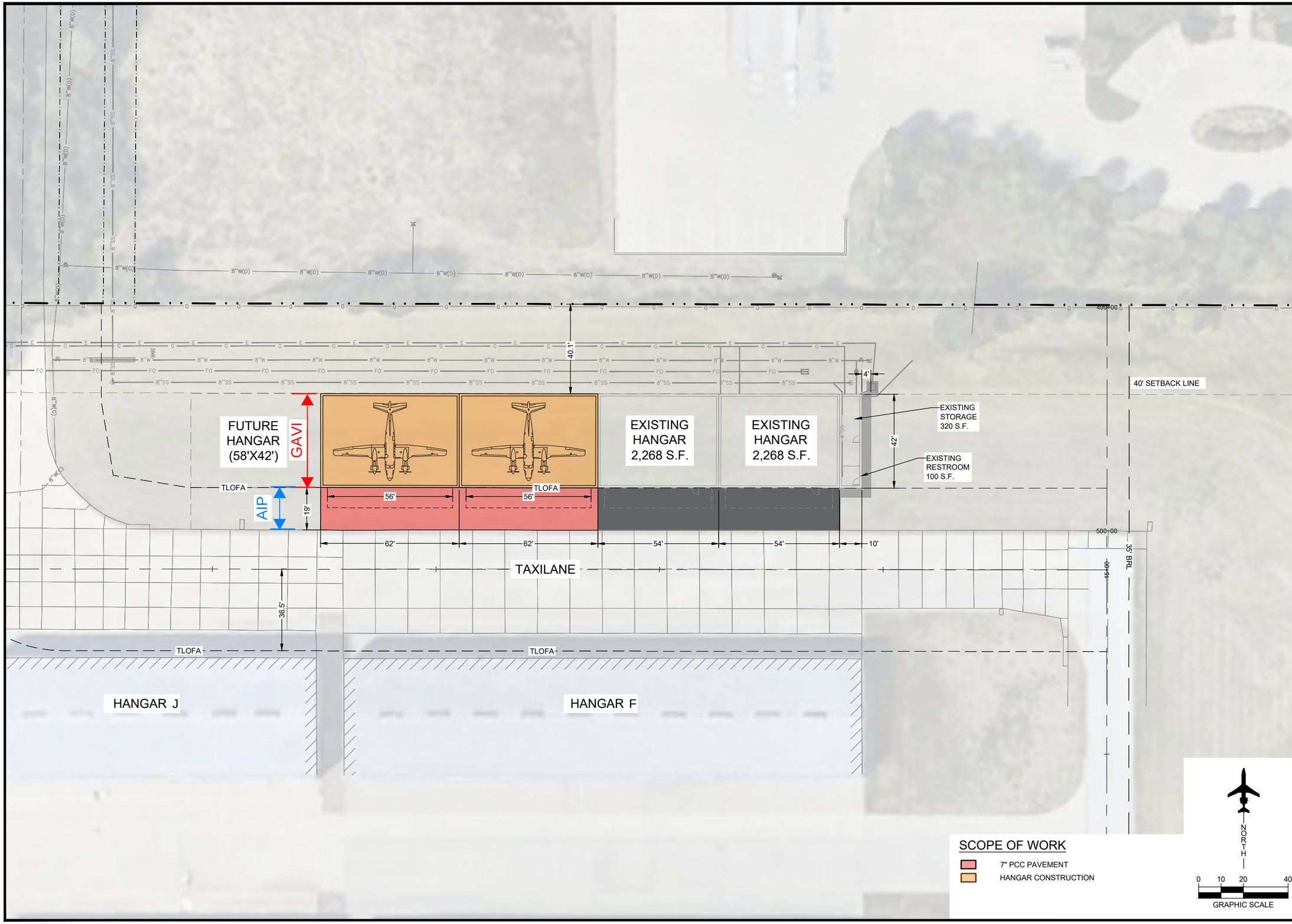

McCLURE™

1360 NW 121st Street
Clive, Iowa 50325
PH. 515-964-1229

Ankeny,IA | Carroll,IA | Clive,IA
Cedar Rapids,IA | Fort Dodge,IA
North Liberty,IA | Sioux City,IA

Macon,MO | Columbia,MO
North Kansas City,MO

Lenexa, KS

NOTICE:
McClure Engineering Co. is not responsible or liable for any issues, claims, damages, or losses (collectively, "Losses") which arise from failure to follow these Plans, Specifications, and the engineering intent they convey, or for Losses which arise from failure to obtain and/or follow the engineers' or surveyors' guidance with respect to any alleged errors, omissions, inconsistences, ambiguities, or conflicts contained within the Plans and Specifications.

Ankeny Regional AIRPORT
Central Iowa's Business Connection

REVISIONS

PROJECT INFO
2022001042-001

ENGINEER	DRAWN BY	CHECKED BY
AJM	MDH	JAP

ANKENY REGIONAL AIRPORT
ANKENY, IOWA
NORTH PROPERTY LINE BOX HANGARS

PROJECT LAYOUT PLAN

P:\2022001042-001\06-Drawings\Civil\E-exhibit\State Grant App FY2025_2024-04-19.dwg 4/29/2024 4:42 PM

DRAWING NO.
GN-04
04 OF 38

IOWADOT
Form 291115 (02-22)

AIRPORT STATE FUNDING PROJECT DATA SHEET

Fiscal Year: 2025

Submit a separate data sheet for each project.

Airport: Ankeny Regional Airport **Date:** May 1, 2024

Project Type (Check one only):
- [x] Airport Improvement Program (AIP)
- [ ] Commercial Service Vertical Infrastructure (CSVI)
- [ ] General Aviation Vertical Infrastructure (GAVI)

Project Description: North Property Line Box Hangars-Phase II. Site work to accommodate the construction of two (2) approximately 62'x42' box hangars on the north side of the north taxilane serving existing Hangars J&F, just south of the north airport property line. The project includes excavation, subgrade, subbase, and PCC paving for the aprons connecting the hangars to the taxilane.

Engineering Firm (If unknown, write unknown): McClure

Shown on current Airport Layout Plan (ALP) [x] Yes [ ] No **Current ALP Date:** March 1, 2021

Sketch: Attach separate sketch from ALP if applicable.

Project Justification (Include detailed information and data to support need): The second phase of this multi-phased project would add two (2) box hangars along the north taxilane, just south of the airport's north property line. The additional space would help to address the airport's pressing need to accommodate aircraft storage. The utilization of existing taxilane facilities provides a greater benefit to the airport for the costs incurred.

Detailed Cost Estimate (Attach separate sheet if necessary): See attached cost estimate

	Amount	Percentage
Total Project Cost:	$222,850	100%
Local Share:	$111,425	50%
Requested State Share:	$111,425	50%

Signature

Airport Manager

Sponsor's Title

Please e-mail the signed application to: Shane.Wright@iowadot.us

IOWADOT
Form 291115 (02-22)

AIRPORT STATE FUNDING PROJECT DATA SHEET

Fiscal Year: 2025

Submit a separate data sheet for each project.

Airport: Ankeny Regional Airport **Date:** May 1, 2024

Project Type (Check one only):
- ☐ Airport Improvement Program (AIP)
- ☐ Commercial Service Vertical Infrastructure (CSVI)
- ☑ General Aviation Vertical Infrastructure (GAVI)

Project Description: North Property Line Box Hangars-Phase II. Project includes the construction of two (2) approximately 56'x42' box hangars on the north side of the north taxilane serving existing Hangars J&F. This will be Phase 2 of the north property line hangar expansion development.

Engineering Firm (If unknown, write unknown): McClure

Shown on current Airport Layout Plan (ALP) ☑ Yes ☐ No **Current ALP Date:** March 1, 2021

Sketch: Attach separate sketch from ALP if applicable.

Project Justification (Include detailed information and data to support need): The second phase of this multi-phased project would add two (2) box hangars along the north taxilane, just south of the airport's north property line. The additional space would help to address the airport's pressing need to accommodate aircraft storage. The utilization of existing taxilane facilities provides a greater benefit to the airport for the costs incurred.

Detailed Cost Estimate (Attach separate sheet if necessary): See attached cost estimate

	Amount	Percentage
Total Project Cost:	$985,000	100%
Local Share:	$685,000	70%
Requested State Share:	$300,000	30%

Signature

Airport Manager

Sponsor's Title

Please e-mail the signed application to: Shane.Wright@iowadot.us

Table 1. Estimated Project Drawings

SHEET NO.	SHEET TITLE	DESCRIPTION
--	COVER SHEET	COVER SHEET
CIVIL		
01	GN-01	INDEX OF PLAN SHEETS AND ESTIMATED QUANTITIES
02	GN-02	REFERENCE NOTES
03	GN-03	REFERENCE NOTES
04	GN-04	GENERAL LEGEND AND ABBREVIATIONS
05	GN-05	GENERAL AIRPORT NOTES
06	GN-06	PROJECT LAYOUT PLAN
07	GN-07	GEOMETRIC LAYOUT AND SURVEY CONTROL PLAN
08	GN-08	SAFETY AND PHASING PLAN
09	GN-09	SAFETY DETAILS
10	EC-01	EXISTING TYPICAL SECTION
11	EC-02	EXISTING CONDITIONS AND REMOVALS
12	UT-01	UTILITY SITE PLAN
13	GR-01	GRADING AND DRAINAGE PLAN
14	GR-02	EROSION CONTROL DETAILS
15	DR-01	STORM SEWER AND UNDERDRAIN PLAN
16	DR-02	STORM SEWER AND UNDERDRAIN DETAILS
17	DR-03	STORM SEWER AND UNDERDRAIN DETAILS
18	PA-01	PROPOSED TYPICAL SECTIONS AND DETAILS
19	PA-02	JOINT ELEVATION AND GEOMETRICS PLAN
20	PA-03	JOINT LAYOUT PLAN
21	PA-04	PAVING DETAILS
ARCHITECTURAL		
22	AR-01	CODE REVIEW AND PLAN
23	AR-02	PROPOSED HANGAR FLOOR PLAN
24	AR-03	HANGAR JOINT LAYOUT PLAN
25	AR-04	BUILDING ELEVATION PLAN
26	AR-05	ROOM FINISH AND DOOR SCHEDULE
27	AR-06	MISCELLANEOUS DETAILS AND NOTES
MECHANICAL		
28	M000	MECHANICAL COVER SHEET
29	M100	MECHANICAL FLOOR PLAN
PLUMBING		
30	P100	PLUMBING PLANS
31	P500	PLUMBING DETAILS
32	P600	PLUMBING SCHEDULES
ELECTRICAL		
33	E000	ELECTRICAL COVER SHEET
34	E100	ELECTRICAL LIGHTING & POWER PLAN
35	E600	ELECTRICAL SCHEDULES

Table 2. Estimated Specifications

Front End Specifications
Cover
Engineering Seals
Table of Contents
Notice of Public Hearing and Letting
Instruction to Bidders
TSB Affirmative Action
Bid Bond
Contract/Performance Bond/Payment Bond/Identity of Subcontractors
Notice of Award/Notice to Proceed/Acceptance
Insurance Requirements
Pay Estimate/Change Order/Release by Claimants
General Provisions
General Notes/Project Meetings/Construction Progress Schedules
Technical Specifications
Section 2010 - Earthwork, Subgrade, and Subbase
Section 3010 - Trench Excavation and Backfill
Section 4020 - Storm Sewers
Section 4030 - Pipe Culverts
Section 4040 - Subdrains and Footing Drain Collectors
Section 7010 - Portland Cement Concrete Pavement
Section 7030 - Sidewalks, Shared Use Paths, And Driveways
Section 8030 - Temporary Traffic Control
Section 9010 - Seeding
Section 9040 - Erosion and Sediment Control
Section 11020 - Mobilization
Section 2010 - Earthwork, Subgrade, And Subbase
Section 3010 - Trench Excavation and Backfill
Section 4020 - Storm Sewers
P-620 - Runway and Taxiway Marking
L-108 - Underground Power Cable for Airports
L-110 - Airport Underground Electrical Duct Banks and Conduits
L-115 - Electrical Manholes and Junction Structures
L-125 - Installation of Airport Lighting Systems

Table 3. Deliverables

	90% Submittal*			**IFB (100%) Submittal***		
	Plans		Spec Book	Plans		Spec. Book
	Full	Half		Full	Half	
Owner		1	1	1	2	2
Engineer		1	1	1	2	2
Plan Houses*					4	4
Bidders					5	5
Total		**2**	**2**	**2**	**13**	**13**

* For submittals to plan houses, a PDF file will be provided for plans and specs.

EXHIBIT H

McCLURE
OPINION OF PROBABLE COST
NORTH PROPERTY LINE BOX HANGARS – PHASE 2

OPINION OF PROBABLE PROJECT COST
PROJECT: ANKENY NORTH PROPERTY LINE BOX HANGARS (PHASE 2) - STATE AIP
AIRPORT: ANKENY REGIONAL AIRPORT
DATE: APRIL 2024

ITEM	ITEM CODE	ITEM DESCRIPTION	UNIT	UNIT COST	QUANTITY	COST
SITE WORK - IOWA DOT AIP GRANT ELIGIBLE COSTS						
1	C-102-1	INSTALLATION AND REMOVAL OF SILT FENCE	LF	$ 10.00	100.0	$ 1,000.00
2	C-102-2	INSTALLATION AND REMOVAL OF FILTER SOCK	LF	$ 20.00	50.0	$ 1,000.00
3	C-105-1	MOBILIZATION	LS	$ 70,000.00	1.0	$ 70,000.00
4	C-105-2	TRAFFIC CONTROL	LS	$ 7,500.00	1.0	$ 7,500.00
5	C-105-3	QUALITY CONTROL AND QUALITY ASSURANCE MATERIAL TESTING	LS	$ 15,000.00	1.0	$ 15,000.00
6	C-105-4	LOCATION AND PROTECTION OF EXISTING AND NEW CABLES AND EQUIPMENT	LS	$ 5,000.00	1.0	$ 5,000.00
7	P-152-1	UNCLASSIFIED EXCAVATION	CY	$ 35.00	200.0	$ 7,000.00
8	P-152-2	12" SUBGRADE PREPARATION	SY	$ 15.00	320.0	$ 4,800.00
9	IDOT 2115-1	6" MODIFIED SUBBASE	SY	$ 20.00	290.0	$ 5,800.00
10	P-505-1	7" PLAIN PORTLAND CEMENT CONCRETE PAVEMENT	SY	$ 90.00	270.0	$ 24,300.00
11	D-701-1	8" PVC STORM SEWER, SDR-26	LF	$ 65.00	30.0	$ 1,950.00
12	D-701-2	DOWNSPOUT CONNECTION TO EXISTING OR PROPOSED 8" STORM SEWER	EA	$ 4,500.00	2.0	$ 9,000.00
13	T-901-1	SEEDING AND FERTILIZING	AC	$ 3,500.00	0.5	$ 1,750.00
14	T-905-1	TOPSOILING (STRIPPING, STOCKPILING, RE-SPREADING)	CY	$ 25.00	220.0	$ 5,500.00
15	T-908-1	MULCHING	AC	$ 3,500.00	0.5	$ 1,750.00
16	SP-01	MISCELLANEOUS UTILITY WORK	LS	$ 15,000.00	1.0	$ 15,000.00
					STATE AIP TOTAL:	**$ 176,350.00**
	TOTAL ESTIMATE OF PROBABLE CONSTRUCTION COST					**$ 176,350.00**

OPINION OF PROBABLE PROJECT COST
PROJECT: ANKENY NORTH PROPERTY LINE BOX HANGARS (PHASE 2) - GAVI
AIRPORT: ANKENY REGIONAL AIRPORT
DATE: APRIL 2024

ITEM	ITEM CODE	ITEM DESCRIPTION	UNIT	UNIT COST	QUANTITY	COST
HANGAR FOUNDATIONS AND BUILDINGS - IOWA DOT GAVI GRANT ELIGIBLE COSTS						
1	13122-1	CONVENTIONAL BOX HANGAR, PRE-ENGINEERED METAL BUILDING, FLOOR SLAB, SUBBASE, AND FOUNDATION (124'X42'), HYDRAULIC DOOR (56'X17' CLEAR), COMPLETE	LS	$ 820,000.00	1	$ 820,000.00
					STATE GAVI TOTAL:	**$ 820,000.00**
	TOTAL ESTIMATE OF PROBABLE CONSTRUCTION COST					**$ 820,000.00**

RESOLUTION NO. 2024-

A RESOLUTION AUTHORIZING THE EXECUTION OF A LAND LEASE AGREEMENT WITH THE IOWA DEPARTMENT OF ADMINISTRATIVE SERVICES FOR THE PURPOSE OF THE CONSTRUCTION OF AN AIRCRAFT HANGAR

WHEREAS, the Polk County Aviation Authority owns certain land, a portion of which the Iowa Department of Administrative Services for and on behalf of the Iowa Department of Public Safety desires to lease for purposes of constructing a hangar; and

WHEREAS, the Polk County Aviation Authority believes it to be in the best interest of the Authority for the hangar to be on its land described as a portion of Phase 3 of the Taxiway D Box Hangar Development; and

WHEREAS, the Polk County Aviation Authority, having reviewed the Land Lease Agreement believes it to be in the best interest of the Aviation Authority to enter into said Agreement; and

WHEREAS, a public hearing on the said hangar land lease agreement was held on September 5, 2024 as required by the Iowa Code.

NOW, THEREFORE, BE IT RESOLVED that the Polk County Aviation Authority hereby approves the Land Lease Agreement with the Iowa Department of Administrtive Services.

BE IT FURTHER RESOLVED that the Chairperson of the Polk County Aviation Authority is hereby authorized to execute said Agreement.

Dated, this 10th day of October, 2024.

_____
Jeff Wangsness, Chairperson

ATTEST:

_____
Diame Klemme, Recording Secretary

HANGAR LAND LEASE AGREEMENT

Article 1
General Agreement

THIS AGREEMENT made and entered into the _10th_ day of _October_ 2024 by and between Polk Authority Aviation Authority, hereinafter referred to as “Authority”, and the Iowa Department of Administrative Services for and on behalf of the Iowa Department of Public Safety, hereinafter referred to as “Lessee”.

Witnesseth

WHEREAS, the Authority is the owner and operator of Ankeny Regional Airport, an airport situated in Polk County, Iowa (the "Airport"); and

WHEREAS, Lessee desires to lease from the Authority a parcel of land approximately _14,400_ square feet, hereinafter referred to as the “Leased Premises”, and described as follows:

> An area approximately __180___ feet wide and __80___ feet deep representing the building footprint as described on Exhibit “A” attached hereto and made part hereof.

Said parcel to be used for the construction of a hangar facility by Lessee for the following purposes:

1. Inside storage of aircraft owned by Lessee and/or its members, private office, kitchenette, and restrooms.

2. Inside storage of aircraft in which Lessee has an agreement for the storage, with any such sublease agreement for space in said hangar facility subject to the terms and conditions of this Lease Agreement.

3. The storage of related materials, equipment and supplies.

WHEREAS, the Authority deems it advantageous to the operation of its Airport to lease to Lessee the area desired, with the rights and privileges as herein set forth:

IT IS MUTUALLY AGREED AND UNDERSTOOD BETWEEN THE AUTHORITY AND THE LESSEE THE FOLLOWING:

Article 2
Terms of Lease Agreement

1. Commencement - The term of this Lease Agreement shall commence on the _____September 5, 2024_____ and shall be in full force and effect through December 31, 2074.

2. Renewal Option - At the expiration of the term specified in this Lease, contingent upon a renewal being allowed by the then existing FAA regulations and approved by the FAA, Lessee has the option to renew this Lease Agreement for such reasonable renewal term as is agreed to between the Authority and the Lessee. Lessee hereby has right of first refusal on any lease of the subject property at the expiration of the term specified herein.

Article 3
Fees and Rentals

From and after the effective date hereof, Lessee agrees to pay to the Authority for the rights and privileges herein provided, the following annual rentals and fees:

__14,400___ square feet x $0.321 cents/square foot
TOTAL: $_4,622.40

Commented [BB[1]: Do we know the square footage yet, so we can calculate the cost per year?

During the term of this Lease Agreement, including any options, Lessee shall pay to the Authority one quarter (1/4) of the total yearly amount due on January 1, April 1, July 1, and October 1 of each year. No demand for rent or fees need at any time be given, and it shall be the duty of the Lessee to pay all monies when due.

For 2024 and each remaining year or portion thereof during the term of this Agreement or any extension hereof, square footage rentals payable to Lessee to the Authority as specified herein shall be subject to adjustment by the Authority annually based on the percentage increase or decrease in the Consumer Price Index (All Urban Consumers - All Items) for the United States City Average as published by the U.S. Department of Labor, Bureau of Labor Statistics, or the national replacement or successor index as readjusted to the base month, and computed by comparison of the current June index of the preceding June, which adjustments, when made, shall be effective January 1 of each of the following calendar years.

If Lessee fails to pay any amounts due under this Lease within sixty (60) days after the later of the date of receipt of the statement for such payment or the date of the satisfactory delivery, furnishing or performance of the services, supplies, materials or contract for which such payment is requested, then the unpaid amount shall bear interest as provided in Iowa Code section 8A.514, until paid; except if the warrant for such payment is not paid, in part or in full, due to lack of funds at the time

of presentment, then interest shall be paid at the maximum rate established pursuant to Iowa Code section 74A.6, on the unpaid amounts until paid in full.

Article 4
Standards for General Aviation Operators

The provisions set forth in the Hangar Construction Standards shown on Exhibit "B" attached hereto and made part hereof is made a part of this Lease Agreement as are any amendments thereto made from time to time. If this Lease Agreement and the Hangar Construction Standards are in conflict in what they require of the Lessee, or in what they obligate the Lessee to do or not to do, the Hangar Construction Standards shall control. In addition, the provisions set forth in Section 1 of the Minimum Requirements for Airport Aeronautical Services at Ankeny Regional Airport are made a part of this Lease Agreement as are any amendments thereto made from time to time. If this Lease Agreement and the provisions of Section 1 of the Minimum Requirements are in conflict in what they require of the Lessee, or in what they obligate the Lessee to do or not to do, Section 1 of the Minimum Requirements shall control.

Article 5
Rights and Privileges of Lessee

Subject to the terms and conditions hereinafter set forth, Lessee is hereby given the following rights during the term of this Lease Agreement:

1. Storage - Lessee has the right to store aircraft on Lessee's Leased Premises; however, Lessee shall not engage in any other business or operation which would be in competition with the services offered by a fixed base operator as defined in the Minimum Requirements for Airport Aeronautical Services at Ankeny Regional Airport including, but not limited to the sale of fuel, repair of aircraft owned by others, aircraft charter, and flight school/instruction activities. Violation of this paragraph shall be considered a material breach of this Lease Agreement authorizing the termination thereof at the election of the Authority.

2. Aeronautical Facility Use - Lessee shall be permitted to use, in common with others, existing and future aeronautical facilities at the Airport as they may exist or be modified, augmented, or deleted from time to time. These facilities shall include, but not be restricted to the landing areas, their extensions and additions, roadways, aprons, and any air navigation facilities or other conveniences for the flying, landing, and taking-off of aircraft. Nothing herein shall prohibit the Authority from modifying, augmenting, or deleting any such items.

3. Ingress and Egress - Subject to rules and regulations governing the use of the Airport as may be established by the Airport Board Manager, the Lessee, its employees, suppliers of materials, furnishers of service, subleases, business visitors, and invites shall have the right of ingress and egress to and from the Premises leased exclusively to Lessee.

4. Quiet Enjoyment - The Authority covenants that upon paying the rent and performing the covenants and conditions herein contained, Lessee shall peacefully and quietly have, hold, and enjoy the Leased Premises for the term of this Agreement. Lessee agrees that

temporary inconveniences, such as noise, disturbances, traffic detours and the like, caused by or associated with the construction of Airport improvements or Airport events shall not constitute a breach of quiet enjoyment of the Leased Premises.

Article 6
Rights and Privileges of Authority

The Authority, in addition to any rights herein retained by it, reserves the following privileges:

1. Authority Representative - The Airport Board Manager is hereby designated as the official representative for the enforcement of all provisions in this Lease Agreement with full power to represent the Authority in dealings with Lessee in connection with the rights and obligations herein provided, and in all actions relating to policy determination, modification of this Agreement, subsequent permissive authorization under this Agreement, termination of this Agreement, and any similar matters affecting the terms of this Lease Agreement.

2. Airport Development - The Authority reserves the right, but shall not be obligated to Lessee, to develop or improve the landing areas and other portions of the Airport as it sees fit, regardless of the desires or views of the Lessee, and without interference or hindrance. If the good faith development of the Airport requires the relocation of Lessee, the Authority agrees to provide a compatible location and agrees to relocate all buildings or provide similar facilities for the Lessee at no cost to the Lessee, or to purchase from Lessee its building(s) and/or structures at the fair market value. The Lessor agrees to make good-faith effort to not require relocation of Lessee.

3. Aerial Approaches - The Authority reserves the right to take any action it considers necessary to protect the aerial approaches and transition surfaces of the Airport against obstruction, together with the right to prevent the Lessee or sub-lessee from erecting or permitting to be erected any building or other structure on the Airport, which, in the opinion of the Authority would limit the usefulness of the Airport or constitute a hazard to aircraft.

4. War, National Emergency, Riot, or Natural Disaster - During time of war, national emergency, riot or natural disaster, the Authority shall have the right to lease the entire Airport or any part thereof to the United States or State of Iowa for military or National Guard use and, in such event, the provisions of this Agreement, insofar as they are inconsistent with the provisions of any lease to any such unit of government, shall be suspended for the term of such government lease.

5. Access to Leased Premises - To the extent necessary to protect the rights and interests of the Authority, or to investigate compliance with the terms of this Agreement, the Airport Board Manager or his designee accompanied by an authorized representative of Lessee may at any and all times have the right to inspect the Leased Premises, including all buildings, structures, and improvements erected thereon. To the extend allowed by law, the Authority shall be responsible for and shall indemnify Lessee against any loss of or injury or damage to any of Lessee's improvements, or other personal property located on the Leased Premises arising out of any act, omission or negligence of the Authority, its employees, agents, invitees, or contractors in

making any inspections of or repairs, additions or alterations to the Leased Premises.

6. Government Use of Airport - This Agreement shall be subordinate to the provisions existing or future agreement between the Authority and the United States Government to the operation or maintenance of the Airport, the execution of which has been, or may be required as a condition precedent to the expenditure of federal funds for the development of the Airport.

7. Unrestricted Right of Flight - There is hereby reserved to the Authority, its successors and assigns, for the use and benefit of the public, unrestricted right of flight for the passage of aircraft in the airspace above the surface of the Leased Premises herein conveyed, together with the right to cause in said airspace such noise as may be inherent in the operation of aircraft, now known or hereafter used for navigation of or flight in the air, using said airspace or landing at, taking off from, or operating on or about the Airport.

Article 7
Obligations of Lessee

Except as otherwise specifically provided herein, Lessee, during the term of this Agreement shall have the following obligations:

1. Condition of Premises - Lessee accepts the Leased Premises in its present condition and, without expense to the Authority, will maintain any installations thereon.

2. Construction - Lessee shall have all construction plans, including site preparation approved by the Authority prior to any construction occurring on the Leased Premises, such approval not to be unreasonably withheld. Construction must begin within twelve (12) months from the execution of this Agreement and must be completed within nine (9) months from the time construction begins. Construction scheduling and operations shall be coordinated with, and approved by the Airport Board Manager before construction shall begin, such approval not to be unreasonably withheld. Lessee understands that restoration of any and all portions of the Airport which are disturbed by Lessee or its contractors during construction shall be at Lessee's sole expense to the same condition as before construction began. Failure to make any restorations as identified herein shall be considered a material breach of this Agreement.

3. Neither the Authority or Lessee shall be liable to the other for any delay or failure of performance of this Lease, and no delay or failure of performance shall constitute a default or give rise to any liability for damages if, and only to the extent that such delay or failure is caused by a "force majeure" and not as a result of the fault or negligence of a party.

As used in this Lease, "force majeure" includes acts of God, war, civil disturbance and any other causes which are beyond the control and anticipation of the party affected and which, by the exercise of reasonable diligence, the party was unable to anticipate or prevent. Failure to perform by a subcontractor or an agent of the Authority shall not be considered a "force majeure" unless the subcontractor or supplier is prevented from timely performance by a "force majeure" as defined in this Lease. "Force majeure" does not include financial difficulties of the Authority, or claims or court orders that restrict the Authority's ability to deliver the goods or services

contemplated by this Lease. If a "force majeure" delays or prevents the Authority's performance, the Authority shall immediately commence to use its best efforts to directly provide alternate, and to the extent possible, comparable performance.

3. Maintenance, Exterior Storage, and Housekeeping – Lessee shall at its expense, keep, maintain and repair the Leased Premises, any improvements thereto, all equipment and buildings in a presentable and operable condition consistent with good business practices, and in a manner to preserve and protect the general appearance and value of other premises in the immediate vicinity, including but not limited to: roof, exterior painting, all personal doors, paved areas, and grass areas within lease lines.

Lessee further agrees that there will be no outside storage of equipment, materials, supplies or damaged or partially dismantled aircraft on the Leased Premises, and will cause to be removed at Lessee's expense all trash, garbage, oil, etc., and agrees not to deposit the same on any part of the Airport except temporarily in conjunction with collection or removal.

In the event Lessee does not keep the Leased Premises in a presentable condition, the Authority has the right to issue a written notice to remedy the condition forthwith. Should Lessee fail to perform satisfactory within thirty (30) days of such notification, or show cause for extension of said time period, the Authority shall have the right to perform, or have performed by an outside contractor the necessary work without liability, and Lessee agrees to pay the Authority one hundred percent (100%) of such expenses within sixty (60) days upon invoice receipt.

In the event of fire of any other casualty to structures owned by Lessee, Lessee shall either repair or replace the building or remove the damaged building and restore the Leased Premises to its original condition; such action must be accomplished within a reasonable time period of the date the damage occurred. Upon petition by Lessee, the Authority may grant an extension of time if it appears such extension is warranted.

4. Additions or Alterations - Lessee is prohibited from making alterations, attaching externa1 fixtures, or making other changes to the exterior of the hangar facility unless approved in advance in writing by the Airport Board Manager.

5. Signage and Illumination - Lessee shall not paint upon, attach, exhibit or display in and about said Leased Premises any sign without the written consent of the Airport Board Manager first obtained regarding the nature and construction of said sign, provided always that the Lessee may erect across the front of the building an appropriate sign containing the name of the Lessee with Airport Board Manager approval within 15 days, said approval not to be unreasonably withheld.

6. Utilities – Connections with utilities shall be installed as follows. Refer to the attached Exhibit C for utility locations:

Commented [BB[2]: Where is Exhibit C? Need to see Exhibit C.

6a. Water Service Connection – Authority has extended an 8" water main past the hangar site. Lessee shall be responsible for connecting a water service line to the 8" water main and extending the water service into the building.

6b. Sanitary Sewer Service Connection – Authority has extended a sanitary sewer past the hangar site and has provided a 6" sewer service stub to serve the Lessee's hangar site. Lessee shall be responsible for connecting to the sewer service stub and extending a sewer service line into the building.

6c. Electric Service Connection – Authority had MidAmerican Energy install a single-phase electric cable past the hangar site. An electric service line shall be extended from the cable to a transformer location near the proposed hangar. Lessee shall be responsible for the electric service line, the transformer, base, and the connection to serve the proposed hangar as required by MidAmerican Energy.

6d. Gas Service Connection – Authority had MidAmerican Energy install gas main past the hangar site. Lessee shall be responsible for the gas service line and connection into the proposed hangar as required by MidAmerican Energy.

6e. Communications Connection – A communications cable has been installed on the airport property by Aureon. Lessee shall be responsible for the service connection from the cable into the proposed hangar as required by the local service provider.

Lessee will install and pay for standard metering devices for the measurement of utility services. In the event it shall become necessary to make changes upon the Leased Premises, or within the structures covered by this Lease Agreement, such as wiring, plumbing, or similar installations, as a condition of the continuance of utility services, and Lessee desires to continue such services, Lessee will promptly make such changes and installations, as its expense, as directed and required by the utility organizations. It is further agreed that the Authority shall have the right, without cost to Lessee, to install and maintain in, on or across the demised Premises, sewer, water, gas, electric, and telephone lines, electric substations, or other installations necessary to the operation of the Airport, or to service other tenants of the Authority; provided, however, that the Authority shall carry out such work and locate any above-ground structures in a manner so as not to unreasonably interfere with Lessee's use of the Leased Premises.

7. Discrimination - Lessee, for itself, its personal representatives, successors in interest, and assigns, as a part of the consideration thereof, does hereby covenant and agree that (a) no person on the grounds of race, sex, color, physical handicap, or national origin shall be excluded from participation in, denied the benefits of, or otherwise subjected to discrimination in the use of said facilities, (b) that in the construction of any improvements on, over, or under such land and the furnishings of services, thereon, no person on the grounds of race, sex, color, physical handicap, or national origin shall be excluded from participation in, denied the benefits of, or otherwise be subjected to discrimination, and (c) that the Lessee shall use the Premises in compliance with all other requirements imposed by or pursuant to Title 49, Code of Federal Regulations, Department of Transportation, Subtitle A, Office of the Secretary, Part 21 , Nondiscrimination in Federally-Assisted programs of the Department of Transportation-Effectuation of Title VI of the Civil Rights Act of 1964, and as said Regulations may be amended.

8. Assignment - The Authority will cooperate with Lessee and hereby permits Lessee to encumber and grant a security interest in any property or property rights, real or personal, it may have in the Leased Premises or property located thereon.

9. Taxes, Licenses and Permits - Lessee shall obtain and keep current all municipal, County, State and Federal licenses and permits that may be required in its operation. Also, the Lessee will bear, pay, and discharge all taxes, assessments and levies of every nature and kind which may be taxed, charged or assessed lawfully against the Leased Premises and improvements thereon, or which may be lawfully levied or imposed upon the leasehold by a governmental agency

10. Liens - Lessee agrees to promptly pay all sums legally due and payable on account of any labor performed on, or materials furnished for the Leased Premised. Lessee shall not permit any liens to be placed against the Leased Premises on account of labor performed or material furnished and in the event such a lien is placed against the Leased Premises, Lessee agrees to save the Authority harmless from any and all such asserted claims and liens and to remove or cause to be removed any and all such asserted claims or liens as soon as reasonably possible.

11. Parking - Lessee agrees to prohibit vehicle parking on the Airport premises other than those vehicles specifically associated with the use of the Leased Premises, and no other. Lessee, its employees, sub-lessees, guests and invites shall park only in Lessee's Hangar, or other publicly designated parking areas. Lessee, its agents or guests are expressly prohibited from operating any vehicle on any area of the Airport designated as a "movement area". Lessee shall at all times comply with posted signs regulating the movement of vehicles.

12. Laws, Ordinances, Rules and Regulations - Lessee agrees to observe and obey the rules and regulations governing the conduct and operation of the Airport facilities promulgated from time to time by the Airport Board Manager. The rules and regulations shall not be unreasonable or inconsistent with safety/security of any Federal agency having jurisdiction with respect thereto. Lessee shall also comply with, at its own cost and expense, all applicable Federal, State and local laws and ordinances. Any violation of this paragraph shall be construed as a material breach of this Lease Agreement authorizing the termination thereof at the election of the Authority, unless Lessee, upon receipt of written notice, within thirty (30) days completes remedial measures acceptable to the Airport Board Manager.

13. Storage of Flammable Fluids - Lessee agrees that the storage of gasoline or other flammable fluids in bulk quantities shall be limited to the Airport Fuel Farm or to such area as designated by the Airport Board Manager. Lessee agrees that the storage of all other gasoline or flammable fluids shall be in an approved steel locker labeled "FLAMMABLE". The Airport Board Manager may, in his discretion, prohibit or impose restrictions on the storage of said material if, in the Manager's opinion, the storage is determined a safety hazard. Lessee agrees that the disposing of any hazardous chemicals or fluids on the Airport premises is prohibited and is considered a material breach of this Agreement.

14. Snow Plowing - The Authority shall provide snow removal on all movement areas consistent with priorities established by its Airport Board Manager. Lessee agrees to be responsible for the removal of snow in all other areas within the Lease Premises.

Both parties recognize that the State of Iowa is self-insured and subject to the provisions of Iowa Code Chapter 669 and, Article VII, Section 1, of the Constitution of The State of Iowa.

Article 9
Indemnification and Hold Harmless

To the extent permitted under and consistent with Article VII, section 1 of the Iowa Constitution and Iowa Code Chapter 669, Lessee shall indemnify, defend and hold harmless Authority and all of its members, employees, officers and agents from and against all claims, liabilities, judgments, damages, losses and costs, including attorney fees, and all expenses which result from the investigation and defense thereof, which arise from or are related to death, damages (including loss of use) or injuries to third persons or their property and their members, employees, officers and agents, which are occasioned in whole or part by any act or omission of the Lessee in its use and occupancy of the Leased Premises and in the conduct of any and all operations permitted or required by this Agreement. The parties will give each other prompt and reasonable notice of any claim made or actions instituted which in any way directly or indirectly affects or may affect each other or Lessee's insured, and each party shall have the right to investigate, compromise, and defend the same to the extent of its own interests. The Authority shall have the right, but not the duty, to participate in the defense of any claim or litigation with attorneys of the Authority's selection without relieving Lessee of any obligations hereunder. Any final judgment rendered against the Authority for any cause for which Lessee is liable hereunder shall be conclusive against Lessee as to Liability and amount. Lessee's obligations herein shall survive any termination of this Agreement or Lessee's activities on the Airport.

Article 10
Cancellation by Authority

The Authority may cancel this Lease Agreement upon or after any one of the following events.

1. The filing by Lessee of a voluntary petition in bankruptcy

2. The institution of proceedings in bankruptcy against Lessee and the adjudication of Lessee as bankrupt pursuant to such proceedings.

3. The taking by a court of jurisdiction of Lessee and its assets pursuant to proceedings brought under the provisions of any Federal Reorganization Act.

4. The filing of any lien against the Premises resulting from any act or omission or Lessee which is not discharged or contested in good faith as determined by the Authority by proper legal proceedings within fifteen (15) days of receipt of actual notice by Lessee, unless Lessee posts a bond within this time period equal to the amount of the lien.

5. The appointment of a receiver of Lessee’s assets, or any general assignment for the benefit to Lessee’s creditors.

6. The transfer of Lessee's interest herein by other operation of law.

7. The default by Lessee in the performance of any agreement required herein, and Lessee's failure to commence and diligently continue to correct such default within thirty (30) days of written notice, unless a shorter time is specified in this Lease Agreement.

8. The lawful assumption by the United States Government, or any authorized agency thereof of the operation, control or use of the Airport and facilities, or any substantial part or parts thereof, in such manner as to substantially restrict Lessee, for a period of at least sixty (60) days, from its Airport operation.

9. Lessee become in arrears in the payment of the whole or any part of the amount(s) agreed upon herein for a period of sixty (60) days after the time such payments become due.

10. The nonpayment of any real estate and/or personal property taxes levied by the County against Lessee's property after such taxes become due.

11. Lessee falsifies any of its records or figures so as to deprive the Authority of any of its rights under the terms of this Agreement.

12. Lessee abandons the hangar or vacates said Premises before the expiration of said term, unless the Airport Board Manager gives Lessee expressed, written permission. Abandonment, for this Agreement, shall be defined as the non-use of the Leased Premises from its specified purpose during a consecutive ninety (90) day time period.

13. The default of any agreement indicated herein as a material breach.

14. Polk County Aviation Authority decides not to operate the facilities as an airport.

In the event of any such termination as above enumerated, the Authority shall have the right at once and without further notice to the Lessee to enter and take full possession of the Leased Premises occupied by the Lessee under this Agreement.

Failure of the Authority to declare this Lease Agreement terminated upon the default of Lessee for any of the reasons set out above shall not operate to bar or destroy the right of the Authority to cancel this Agreement by reason of any subsequent violation of the terms of this Agreement. Further, the acceptance of rental or fees by the Authority for any period after a default of any of the terms, covenants or conditions by Lessee shall not be deemed a waiver of any right on the part of the Authority to cancel this Lease Agreement.

Article 11
Cancellation by Lessee

Lessee may cancel this Agreement at any time that it is not in default in its obligations by giving the Airport Board Manager thirty (30) days written notice to be served as hereinafter

provided after the happening of any of the following events, if such event materially impairs the conduct of its normal business on the Airport:

1. Termination Due to Lack of Funds or Change in Law. Notwithstanding any other provision of this Agreement to the contrary and subject to the limitations, conditions and procedures set forth below, Lessee may terminate this Agreement without penalty by giving sixty (60) days written notice to the Authority in the event of any of the following contingencies:

a.) If there is a reduction, at any time, of 10% or more of the funds anticipated for the continued fulfillment of this Lease either through the failure of the General Assembly, the Governor, the United States Congress or the President to appropriate funds; or,

b.) If there is a discontinuance or material alteration of the program for which funds were provided. In the event that an appropriation to cover the cost of this Agreement becomes available within sixty (60) days subsequent to termination under this clause, the Lessee agrees to re-enter an Agreement with the terminated Authority under the same provisions, terms and conditions as the original lease.

c.) Remedy for Non-Appropriation Termination. In the event of termination of the Agreement due to nonappropriation, the exclusive, sole and complete remedy of the Authority shall be to recover and possess the property subject to this Agreement and to receive payment as specified in this subsection. In the event of termination of this Lease due to non-appropriation, Lessee shall have no further liability.

2. The issuance by a court of competent jurisdiction of any injunction in any way preventing or restraining normal use of the Airport or any substantial part of it, and the remaining in force of such injunction for a period of sixty (60) consecutive days, such injunction not being the result of any fault of Lessee;

3. The inability of Lessee to use, for a period of sixty (60) consecutive days the Airport or any substantial part of it due to enactment or enforcement of any law or regulation, or because of fire, earthquake or similar casualty or Acts of God or the public enemy;

4. The lawful assumption by the United States Government of the operation, control or use of the Airport or any substantial part of it for military purposes in time of war or national emergency for a period of at least sixty (60) days; or

5. The material breach by the Authority of any of the terms, covenants, and conditions of the Agreement and the failure of the Authority to remedy such breach for a period of ninety (90) days after receipt of written notice from the Lessee of the existence of such breach.

6. The Lessee may cancel and terminate this Agreement upon one hundred-eighty (180) days' notice in writing to the Lessor.

Failure of Lessee to declare this Agreement terminated upon the default of the Authority for any of the reasons set out above shall not operate to bar or destroy the right of Lessee to cancel this Agreement by reason of any subsequent violation of the terms of this Lease Agreement.

Article 12
Waiver of Subrogation

The Authority and Lessee hereby release each other from any and all responsibility to the other for any loss of damage to property caused by fire or other peril if the property is insured for such loss or damage in any policy of insurance, even if such loss or damage is caused by the fault or negligence of the other party or anyone for whom such party is responsible. The Authority and the Lessee agree that to the extent any such policy of insurance provides a right of subrogation in the insurer, or to the extent a right of subrogation exists independent of such policy, each will indemnify and hold the other harmless for any loss, claim or expense suffered as the result of any action taken pursuant to the right of subrogation. To the greatest extent possible, the Authority and the Lessee will, in furtherance of the intent of this provision, make every effort to obtain from its insurance carrier a waiver of subrogation for the matters here described in any such policy of insurance.

Article 13
No Waiver of Default

No action whatsoever, except an express written waiver, shall be construed to be or act as a waiver by the Authority of Lessee of any fault by the other in the performance of any of the terms, covenants, or conditions hereof to be performed, kept, and observed by it. No express written waiver of any subsequent default by the other in the performance of any of the terms, covenants and agreements hereof to be performed, kept, and observed by it.

Article 14
Remedies are Cumulative

The rights and remedies hereby created are cumulative and the use of one remedy shall not be taken to exclude or waive the right to the use of another.

Article 15
Laws of Iowa Shall Govern

This Lease Agreement shall be deemed to have been made in and shall be construed in accordance with the laws of the State of Iowa.

Article 16
Counterparts

This Lease Agreement has been executed in several counterparts, each of which shall be taken to be an original, and all collectively but one instrument.

Article 17
Severability

In the event that any provision herein contained is held to be invalid by any court of competent jurisdiction, the invalidity of any such provision shall in no way affect any other provision contained herein, provided that the invalidity of any such provision does not materially prejudice either the Authority or Lessee in their respective rights and obligations contained in the valid provisions of this Lease Agreement.

Article 18
Independence of Contract

It is further mutually understood and agreed that nothing herein contained is intended or shall be construed as in any way creating or establishing the relationship of co-partners between the parties hereto or as constituting the Lessee as the agent or representative or employee of the Authority for any purpose or in any manner whatsoever.

Article 19
Rights Upon Termination

Upon expiration of this Agreement, Lessee shall have the first right of refusal to execute a new land lease agreement with terms and conditions in accordance with the then existing FAA regulations and approved by the FAA.

Upon expiration of this Agreement and Lessee's desire not to enter into a new agreement at the then current terms and conditions, or upon sooner termination of this Agreement as stipulated, the Authority shall have the option of exercising the following termination actions at the Authority's sole discretion:

1. Order Lessee to, within a reasonable agreed upon time period after Agreement expiration, remove all structures located on the Leased Premises and restore the site to its original condition.
2. The Authority shall take title to all structures located on the premises if not removed by the Lessee within a reasonable agreed upon time period of termination of this Agreement.

Article 20
Misrepresentation

All terms and conditions with respect to this Agreement are expressly contained herein, and both parties agree that no representative or agent of the Authority or Lessee has made any representation or promise with respect to this Agreement not expressly contained herein.

Article 21
Successors and Assigns Bound

All of the provisions, covenants, and stipulations in this Lease Agreement shall extend to and bind the legal representatives, successors and assigns of the respective parties.

Article 22
Holdover Possession of Premises by Lessee

In the event that Lessee should hold over and remain in possession of the Leased Premises after the expiration of the term of this Lease Agreement or termination for any other cause, such holding over shall be deemed not to operate as a renewal or extension of this Agreement and shall create a tenancy from month to month which may be terminated at any time by the Authority or Lessee, upon notice as required to end month to month tenancies.

Article 23
Hazardous Waste

Definitions. For the purposes of interpreting this Lease Agreement, the following definitions are applicable unless context requires a different meaning:

1. Environmental Law shall mean any federal, state or local law, ordinance or other statute of a governmental or quasi-governmental authority relating to pollution or protection of the environment.

2. Hazardous Substances shall mean pollutants, contaminants, toxic or hazardous wastes, or any other substances, the use and/or the removal of which is required or the use of which is restricted, prohibited or penalized by any Environmental Law.

Lessee Duties. Lessee hereby agrees that:

1. Limitation of Activity. No activity will be conducted on the Leased Premises that will produce or make use of any Hazardous Substance, except for such activities that are part of the ordinary course of Lessee's business activities (Permitted Activities) provided said Permitted Activities are conducted in accordance with all Environmental Laws. Lessee shall be responsible for obtaining any required permits and paying any fees and providing any testing required by any governmental agency.

2. Limitation of Storage. The Leased Premises will not be used in any manner for the storage of any Hazardous Substances except for the temporary storage of such materials that are used in the ordinary course of Lessee's business (Permitted Materials) provided such Permitted Materials are properly stored in a manner and location meeting all Environmental Laws. Lessee shall be responsible for obtaining any required permits and paying any fees and providing any testing required by any governmental agency.

3. No portion of the Leased Premises will be used as a landfill or a dump.

4. Lessee will not permit any Hazardous Substances to be brought onto the Leased Premises, except for the Permitted Materials, and if so brought or found located thereon, the same shall be immediately removed, with proper disposal, and all required cleanup procedures shall be diligently undertaken pursuant to all Environmental Laws.

Inspections by Authority. The Authority or Authority's representative, accompanied by the Lessee or its representative, shall have the right but not the obligation to enter the Leased Premises for the purpose of inspecting the storage, use and disposal of Permitted Materials to ensure compliance with all Environmental Laws. Should it be determined, in the Authority's sole opinion, that said Permitted Materials are being improperly stored, used, or disposed of, then Lessee shall immediately take such corrective action as requested by the Authority. Should Lessee fail to take

such corrective action within 24 hours, the Authority shall have the right to perform such work and Lessee shall promptly reimburse the Authority for any and all costs associated with said work.

Clean-up Costs. If at any time during or after the term of the Lease Term, the Leased Premises are found to be so contaminated or subject to said conditions, due to contamination caused by Lessee, Lessee shall diligently institute proper and thorough cleanup procedures at Lessee's sole cost.

Notification Regarding Environmental Law Issues. During the Lease Term, each party hereto shall promptly provide the other party with copies of all summons, citations, directives, information inquiries or requests, notices of potential responsibility, notices of violation or deficiency, orders or decrees, claims, complaints, investigations, judgments, letters, notice of environmental liens, and other communications, written or oral, actual or threatened, from the United States Environmental Protection Agency, Occupational Safety and Health Administration, The State of Iowa Environmental Protection Agency or other federal, state or local agency or authority, or any other entity or individual, concerning:

1. Any Hazardous Substance on the Leased Premises;
2. The imposition of any lien on the Leased Premises; or
3. Any alleged violation of or responsibility under any Environmental Law.

Limitation of Liability. Nothing herein contained shall obligate Lessee to pay for any charges, taxes, assessments, penalties, fines, clean up, or any charge or cost incident to Hazardous Substances or clean up thereof, unless caused or created by Lessee; and should Hazardous Substances or products be found, on or under the Leased Premises, to the extent allowed by law, the Authority shall pay all charges, taxes, assessments, penalties, fines, or any charge or cost incident to the Hazardous Substances, holding Lessee harmless from and against the same and to the extent allowed by law the Authority does hereby agree to indemnify Lessee from and against any and all liability of any kind or type, arising therefrom. Provided however, nothing contained herein shall be construed to create any duty on the part of the Authority to the general public, any governmental or other regulatory authority, or other parties without privity of contract with respect to this Lease.

Article 24
Paragraph Headings

Amendments. This Agreement may be amended in writing from time to time by mutual consent of the parties. All amendments to this Agreement must be fully executed by both parties.

Article 25
Paragraph Headings

Headings or Captions. All paragraph and subparagraph headings contained in this Lease Agreement are for the in reference only, and are not intended to define or limit the scope of any provision.

Article 26
Choice of law and Forum

The terms and provisions of this Lease shall be construed in accordance with the laws of the State of Iowa. Any and all litigation or actions commenced in connection with this Lease shall

be brought in Des Moines, Iowa, in Polk County District Court for the State of Iowa. If however, jurisdiction is not proper in the Polk County District Court, the action shall only be brought in the United States District Court for the Southern District of Iowa, Central Division, provided that jurisdiction is proper in that forum.

Article 27
Approvals

Whenever under this Lease, provision is made for either party to obtain the written consent or approval of the other party, such response shall not be unreasonably withheld or delayed.

Article 28
Notices

Notices to the Authority or Lessee provided for herein shall be hand delivered or sent by certified mail, postage prepaid, addressed to:

Authority:
Polk County Aviation Authority
Attn: Assistant City Manager
410 West First Street
Ankeny, IA 50021

Lessee:
Iowa Department of Administrative Services
Statewide Space Management and Leasing Bureau

109 SE 13th Street
Des Moines, IA 50319

Iowa Department of Public Safety
Oran Pape State Office Building
321 East 7th Street
Des Moines, IA 50319

or to such other addresses as the parties may designate to each other in writing from time to time, and such notices shall be deemed to have been given when so sent.

All payments shall be made payable to the Ankeny Regional Airport and sent to the attention of the Airport Board Manager at the Authority's address stated above.

Article 29

Cumulative Rights

The various rights, powers, options, elections and remedies of either party, provided in this Lease shall be construed as cumulative and no one of them is exclusive of the other or exclusive of any rights, remedies or priorities allowed either party by law, and shall no way affect or impair the right to either party to pursue any other equitable or legal remedy to which either party may be entitled as long as any default remains in any way unremedied or unsatisfied.

Article 30
Time is of the Essence

Time is of the essence with respect to the performance of all terms, conditions and covenants of this Lease.

Article 31
Exhibits

A. Leased Premises Legal Description
B. Hangar Construction Standards
C. Map of Utility Connections

Article 32

Closing and Signature

IN WITNESS WHEREOF, the parties have hereunto set their hands on the date first above written.

Authority:
Polk County Aviation Authority

By: _____
Title: _____

Lessee:
State of Iowa, Iowa Department of Administrative Services on behalf of and for the benefit of: Iowa Department of Public Safety

By: _____
Title:_____

Approved as to content and form:
Iowa Department of Public Safety

By: _____
Title: _____

EXHIBIT A to the Hangar Land Lease Agreement

LEGAL DESCRIPTION

-

EXHIBIT B to the Hangar Land Lease Agreement

HANGAR CONSTRUCTION STANDARDS

Ankeny Regional AIRPORT
Central Iowa's Business Connection

Paul Moritz, P.E.
Airport Board Manager

Ankeny Regional Airport – Hangar Construction Standards

Updated June 10, 2021 and August 25, 2021

Applicability

- The provisions of these standards apply to any hangar, garage, and other structure constructed within the limits of the Ankeny Regional Airport property. The purpose of these Design Standards is to ensure that development at the Airport is consistent and of a high quality to protect and enhance the investments made at the airport.

- The requirements and regulations of the City of Ankeny Planning and Building Department, including site plan requirements, zoning ordinances and building codes, apply to all building construction activities within the airport property. The City of Ankeny site plan approval process, including pre-application conference, Technical Committee approval, and Planning and Zoning Commission approval, must be followed.

- An approved long-term land lease with the Polk County Aviation Authority shall be obtained by any private individual prior to review, approval and development of a privately-owned hangar on the airport property.

Review Process

- Applications for construction of a hangar or other building structure on Ankeny Regional Airport property must be approved by the City of Ankeny Planning and Building Department. A site plan must be reviewed by City staff and approved by the Ankeny Planning and Zoning Commission.

- After approval of the site plan, a building permit must be submitted and approved by the City of Ankeny Planning and Building Department according to Municipal Code Chapter 175.

- Applications for construction shall also be reviewed and approved by the Polk County Aviation Authority Board (PCAA). These Hangar Construction Standards shall be utilized in the Board's review.

- The review process for the City of Ankeny and the PCAA can run concurrently.

FAA Adherence

All building construction on the Ankeny Regional Airport shall comply with regulations and requirements of the Federal Aviation Administration (FAA). Nothing in these standards shall overrule or exempt any FAA requirements.

Building Design and Materials
An airport hangar shall be designed so that the finished structure is compatible with other surrounding structures on the airport property. Compatibility includes materials, colors, scale, size, dimensions and proportions.

- Hangar Locations: Hangar locations shall be determined by the PCAA based on FAA regulations, the current Airport Layout Plan, and other regulations of the PCAA and the City of Ankeny. Hangar facilities including structures, entrances, sidewalks, parking stalls, etc. must be contained within the leased land area.

- Hangar Dimensions: The dimensions of the exterior of the hangar shall be consistent in size to adjacent existing or planned structures so that sight lines along the front face**s** of the hangars are preserved. The proposed hangar pad site as identified on the Airport Layout Plan represents the preferred hangar footprint. Construction of a smaller-sized hangar may be approved by the PCAA at the time of application.

- Hangar Heights: The maximum height of a hangar shall comply with the maximum height regulations as set by the FAA for regulating airspace in the vicinity of the airport runways. The tallest portion of the structure**s** shall be no higher than the building height restrictions as shown on the Airport Layout Plan and as defined in Ankeny Municipal Code Chapter 201. The maximum height of a hangar shall also meet the zoning regulations of the City of Ankeny.

- Hangar Framework: Hangar framework, including columns, beams, trusses, rafters, and braces, shall be metal or as otherwise approved. Framework must be designed to meet current building code standards. A wood-framed hangar will not allowed. Clear-span interior construction shall be utilized.

- Adjacent Hangars: Connecting adjacent hangars together to eliminate narrow open areas between hangars is encouraged. Connections to an existing adjacent hangar must be approved by the adjacent hangar owner and must meet the requirements of the Ankeny Building Department including (but not limited to) the need for fire walls, sprinklers, and utility conveyance. The roof slope/pitch of the new hangar shall be oriented so that storm water does not drain onto the adjacent hangar, nor onto the apron area in front of the hangar.

- Doors: Hangar doors shall be overhead doors unless otherwise approved by the PCAA. They shall be metal doors that are produced by an aviation door manufacturer. Large overhead hangar doors shall not be installed on the land side walls of the hangars (facing out from the airport) without PCAA approval.

- Flatwork: Hangar floors, aprons and ramp areas must be paved with finished PCC concrete of a minimum thickness as dictated by the current FAA reference tables for airport apron and taxiway design.

- Exterior Wall Materials: The exterior walls of a hangar shall be constructed of materials approved by the PCAA. Generally, materials may include metal, masonry, prefinished aluminum, glass, concrete, steel or a combination of these materials. Wood, Masonite siding or galvanized metal will not be allowed. The architectural design, style and color scheme of a hangar shall match on all sides of the hangar.

- Roofing Materials: Wood, wood composite, or asphalt shingles are not allowed as roofing materials. Metal roofs shall be a minimum of 28 gauge steel, standing seam type (no screw-down or bolted allowed). Factory finish shall be in a color approved by the PCAA.

- Exterior Colors: Colors of hangar walls, doors and roofing shall be muted, neutral, earth tone colors compatible with surrounding features and existing or previously approved structures planned on the airport and as determined and approved by the PCAA. For the Taxiway D Hangars, the PCAA has chosen a color scheme of white walls with gray trim so that all hangars have generally the same appearance.

- Signing: Exterior signing must meet the requirements of the Ankeny Municipal Code in regard to size, style, and lighting. Signing must be approved by the PCAA.

- Parking and Access: Parking stalls may be constructed by the hangar owner on the land side of the hangar. Parking stalls are prohibited on the airside of the hangar, where aircraft movement would be compromised. If the proposed hangar is adjacent to a parking lot that is maintained by the PCAA, a sidewalk is required to be constructed between the hangar and lot. All sidewalks and sidewalk ramps shall be constructed to meet current ADA requirements.

- Lighting: Exterior lighting shall be installed in accordance with Municipal Code Section 192.02, Para. 3.A.(8). The lighting shall be shielded to restrict light spillover onto the airfield.

- Landscaping: The planting of shrubs, ornamentals, and other vegetation shall be approved by the PCAA. Trees are prohibited. All non-paved areas disturbed by the hangar construction shall be restored with sod or permanent grass seeding.

- Airport Security: The airport is currently protected by a perimeter chain link fence. If construction of a hangar or other structure causes the removal of a section of the fence, the fence shall be promptly replaced either by a new fence or by an exterior hangar wall (the hangar can function as part of the fence line). Temporary construction fencing consisting of similar chain link materials shall be included as part of the hangar construction so that airport security is maintained at all times during hangar construction.

- Site Drainage: The grade of the finished floor of a hangar and the surrounding paved surfaces shall provide positive flow of storm water out of and away from the new hangar. The hangar roof/pitch will be sloped so that storm water does not drain directly onto the apron in front of the hangar, or onto adjacent hangars. In areas where no storm sewer exists, the hangar owner may be required to install storm sewers, intakes and other storm facilities to accommodate proper storm drainage.

- Utilities: Connections to electric, gas, sanitary sewer, water mains, and communication facilities shall be the responsibility of the hangar owner. All utility services shall be constructed underground.

- Sitework Construction Specifications: All exterior utility and pavement construction shall meet the requirements of the current version of the Iowa Statewide Urban Standard Specifications for Public Improvements as amended by the City of Ankeny's Supplemental Specifications.

- Hangar Pad Utilization: It is the intent of the PCAA to utilize as much of the available hangar land lease area on the airport as possible. All hangar construction must meet the building standards of the City of Ankeny, including adherence to the IFC and NFPA Standards in regard to the need for fire-rated barrier walls and/or interior sprinkler systems. Adjacent hangar structures shall be constructed as attached (with common walls) or with 10 feet or less of open ground between the exterior walls. This open ground can be utilized to facilitate proper storm water drainage between buildings. Leasing more than 10 feet of open ground area adjacent to a proposed hangar to avoid the requirement to construct exterior fire barrier walls and/or provide a sprinkler system will not be allowed.

Submittals

In order to facilitate the necessary approvals by the City of Ankeny and the PCAA, the following submittals are required:

- Site plan drawings according to Section 192.02 of the City of Ankeny Municipal Code.
- Structural drawings, details and specifications as required by the City of Ankeny Building Department.
- Elevation views or other graphic representations showing hangar dimensions, roof slopes, door locations, colors, building materials, etc. for review by the PCAA Board.
- A construction schedule.

The construction of the proposed hangar can commence after each of the following are completed:

1) The City of Ankeny approves the site plan and issues a building permit to the hangar contractor.
2) The PCAA exercises a land lease for the hangar property with the owner.
3) The PCAA issues a letter to the hangar owner signifying that these building standards have been met.
4) The PCAA approves a hangar construction schedule, which shall become binding upon the owner / developer.

EXHIBIT C to the Hangar Land Lease Agreement

UTILITY LOCATIONS

-

LEASE AREA EXHIBIT ANKENY, IOWA

BASIS OF BEARING:
IA SPC - SOUTH ZONE

AREA SUMMARY:
0.33 ACRES TOTAL

SITE ADDRESS:
N/A

LEGAL DESCRIPTION:
BEING A PART OF THE SOUTHEAST QUARTER OF THE SOUTHWEST QUARTER OF SECTION 31, TOWNSHIP 80 NORTH, RANGE 23 WEST OF THE 5TH P.M., CITY OF ANKENY, POLK COUNTY, IOWA DESCRIBED AS FOLLOWS:

COMMENCING AT THE CENTER OF SAID SECTION 31; THENCE S00°29'07"W, ALONG THE WEST LINE OF THE SOUTHEAST QUARTER OF SAID SECTION 31, A DISTANCE OF 1724.47 FEET; THENCE N89°30'53"W, 454.33, TO THE POINT OF BEGINNING; THENCE N44°56'39"W, 80.00 FEET; THENCE S45°03'21"W, 180.00 FEET; THENCE S44°56'39"E, 80.00 FEET; THENCE N45°03'21"E, 180.00 FEET, TO THE POINT OF BEGINNING.

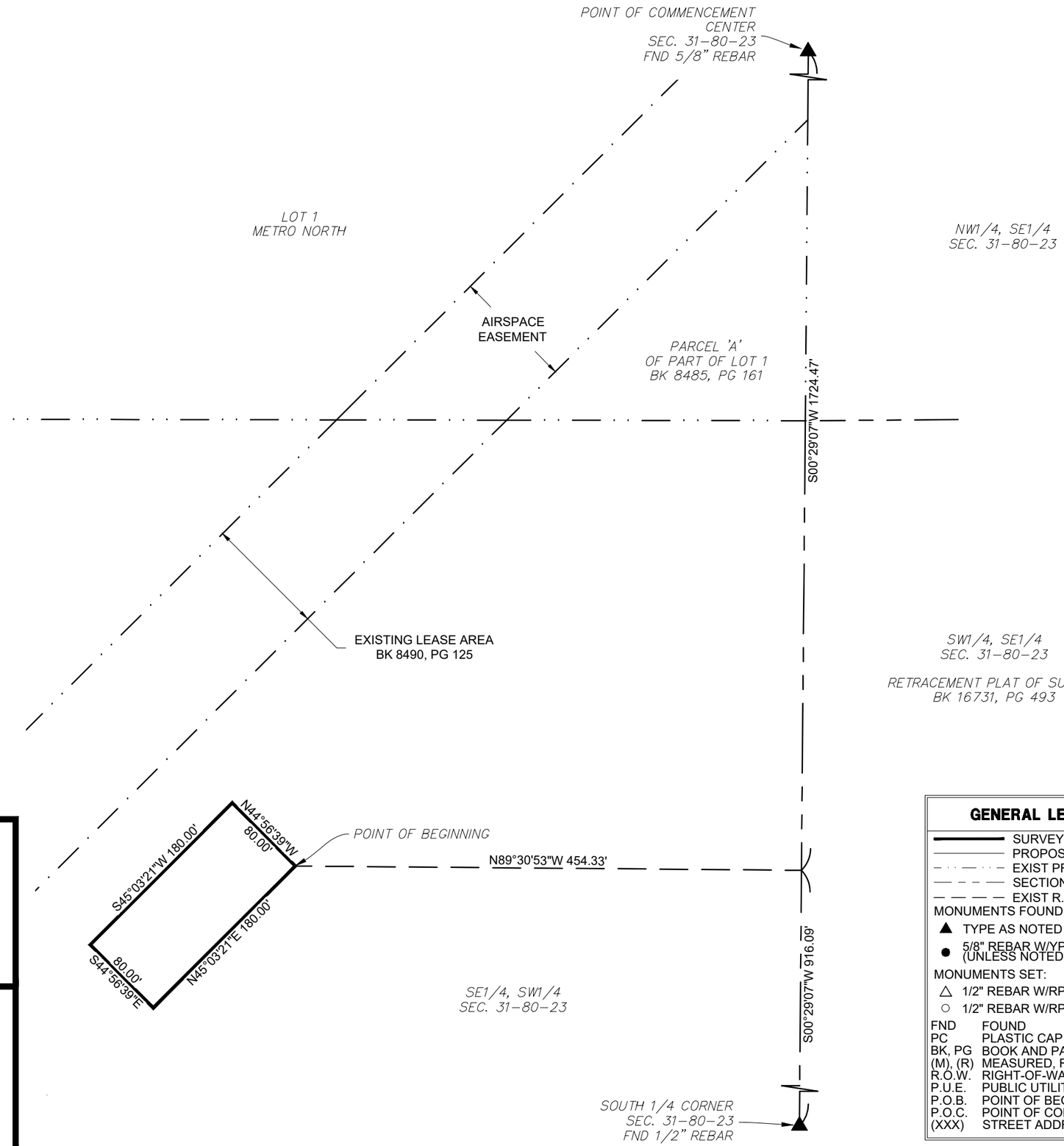

GENERAL LEGEND

- SURVEY BOUNDARY
- PROPOSED LOT
- EXIST PROPERTY LINE
- SECTION LINE
- EXIST R.O.W.

MONUMENTS FOUND:
- ▲ TYPE AS NOTED
- ● 5/8" REBAR W/YPC #15982 (UNLESS NOTED OTHERWISE)

MONUMENTS SET:
- △ 1/2" REBAR W/RPC #24477
- ○ 1/2" REBAR W/RPC #24477

FND	FOUND
PC	PLASTIC CAP
BK, PG	BOOK AND PAGE
(M), (R)	MEASURED, RECORDED
R.O.W.	RIGHT-OF-WAY
P.U.E.	PUBLIC UTILITY EASEMENT
P.O.B.	POINT OF BEGINNING
P.O.C.	POINT OF COMMENCEMENT
(XXX)	STREET ADDRESS

LICENSED LAND SURVEYOR
PATRICK SHELQUIST
24477
IOWA

I HEREBY CERTIFY THAT THIS LAND SURVEYING DOCUMENT WAS PREPARED AND THE RELATED SURVEY WORK WAS PERFORMED BY ME OR UNDER MY DIRECT PERSONAL SUPERVISION AND THAT I AM A DULY LICENSED LAND SURVEYOR UNDER THE LAWS OF THE STATE OF IOWA.

patrick Shelquist — 09/03/2024
PATRICK SHELQUIST — DATE
MY LICENSE RENEWAL DATE IS DECEMBER 31, 2025

PAGES OR SHEETS COVERED BY THIS SEAL: THIS SHEET

DATE SURVEYED: 7/12/2024

McCLURE™
making lives better.
1360 NW 121st Street, STE A
Clive, Iowa 50325
515-964-1229
fax 515-964-2370

NORTH
0 50 100
(IN FEET)
1 inch = 100 ft.

ENGINEER	DRAWN BY
N/A	P.SHELQUIST
SURVEYOR	CREW CHIEF
P.SHELQUIST	K.RANDALL
DRAWING NO.	SHEET NO.
EXH-01	01/01

REVISIONS

LEASE AREA EXHIBIT
ANKENY, IOWA
POLK COUNTY
2022001042
09/03/2024

DRAWING PATH: P:\2022001042\06-Drawings\Survey\August 2024 - Hwy Patrol Hangar\Srv_Hwy Patrol Hangar_Final.dwg PLOT DATE: 09/3/2024 3:24 PM PLOTTED BY: PATRICK SHELQUIST

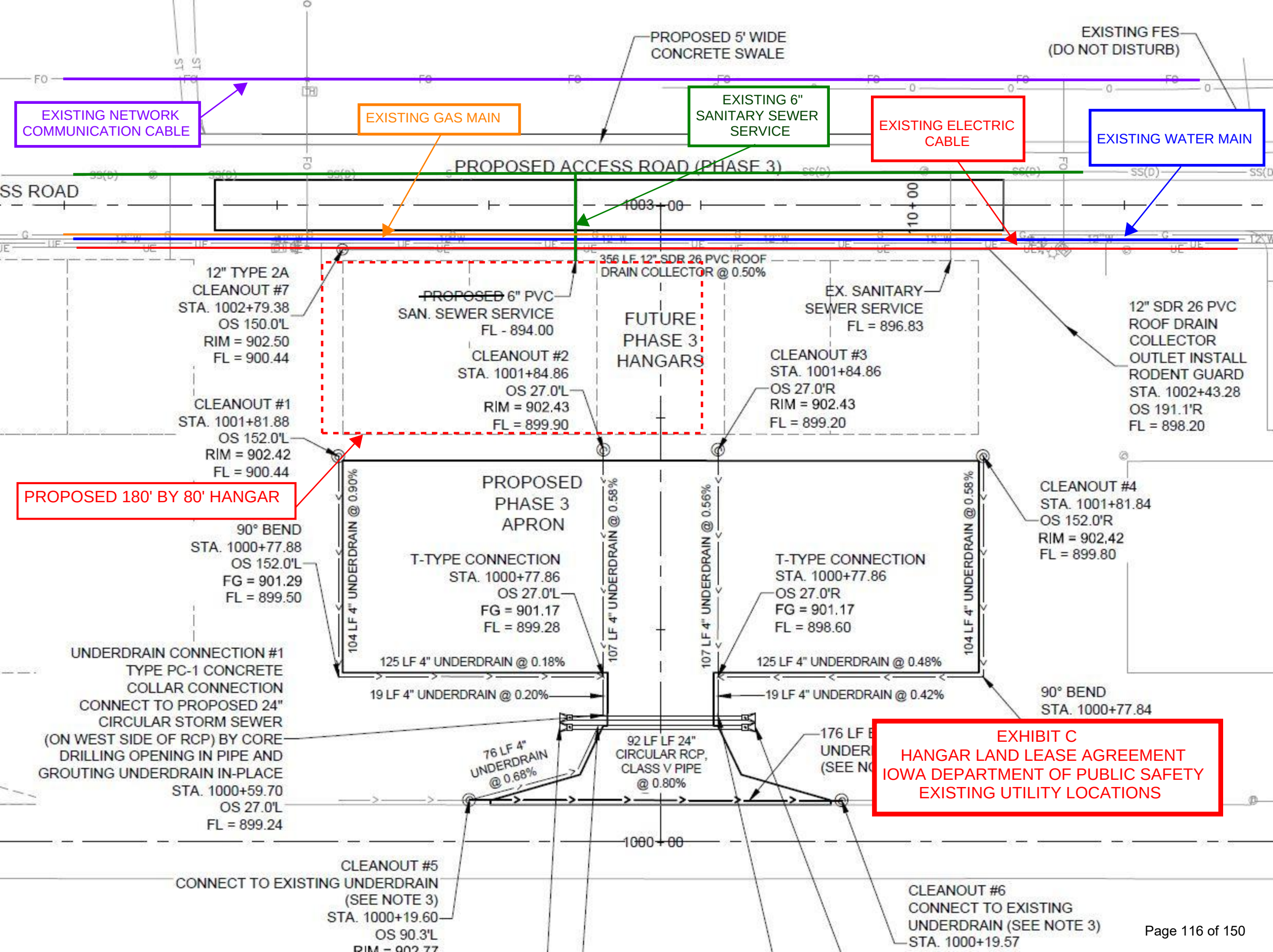
PROPOSED 5' WIDE CONCRETE SWALE
EXISTING FES (DO NOT DISTURB)
EXISTING NETWORK COMMUNICATION CABLE
EXISTING GAS MAIN
EXISTING 6" SANITARY SEWER SERVICE
EXISTING ELECTRIC CABLE
EXISTING WATER MAIN
PROPOSED ACCESS ROAD (PHASE 3)
SS ROAD
1003+00
10+00
356 LF 12" SDR 26 PVC ROOF DRAIN COLLECTOR @ 0.50%
12" TYPE 2A CLEANOUT #7 STA. 1002+79.38 OS 150.0'L RIM = 902.50 FL = 900.44
~~PROPOSED~~ 6" PVC SAN. SEWER SERVICE FL - 894.00
FUTURE PHASE 3 HANGARS
EX. SANITARY SEWER SERVICE FL = 896.83
12" SDR 26 PVC ROOF DRAIN COLLECTOR OUTLET INSTALL RODENT GUARD STA. 1002+43.28 OS 191.1'R FL = 898.20
CLEANOUT #2 STA. 1001+84.86 OS 27.0'L RIM = 902.43 FL = 899.90
CLEANOUT #3 STA. 1001+84.86 OS 27.0'R RIM = 902.43 FL = 899.20
CLEANOUT #1 STA. 1001+81.88 OS 152.0'L RIM = 902.42 FL = 900.44
PROPOSED 180' BY 80' HANGAR
PROPOSED PHASE 3 APRON
104 LF 4" UNDERDRAIN @ 0.90%
107 LF 4" UNDERDRAIN @ 0.58%
107 LF 4" UNDERDRAIN @ 0.56%
104 LF 4" UNDERDRAIN @ 0.58%
CLEANOUT #4 STA. 1001+81.84 OS 152.0'R RIM = 902.42 FL = 899.80
90° BEND STA. 1000+77.88 OS 152.0'L FG = 901.29 FL = 899.50
T-TYPE CONNECTION STA. 1000+77.86 OS 27.0'L FG = 901.17 FL = 899.28
T-TYPE CONNECTION STA. 1000+77.86 OS 27.0'R FG = 901.17 FL = 898.60
UNDERDRAIN CONNECTION #1 TYPE PC-1 CONCRETE COLLAR CONNECTION CONNECT TO PROPOSED 24" CIRCULAR STORM SEWER (ON WEST SIDE OF RCP) BY CORE DRILLING OPENING IN PIPE AND GROUTING UNDERDRAIN IN-PLACE STA. 1000+59.70 OS 27.0'L FL = 899.24
125 LF 4" UNDERDRAIN @ 0.18%
125 LF 4" UNDERDRAIN @ 0.48%
19 LF 4" UNDERDRAIN @ 0.20%
19 LF 4" UNDERDRAIN @ 0.42%
90° BEND STA. 1000+77.84
76 LF 4" UNDERDRAIN @ 0.68%
92 LF LF 24" CIRCULAR RCP, CLASS V PIPE @ 0.80%
176 LF
UNDER
(SEE N
EXHIBIT C
HANGAR LAND LEASE AGREEMENT
IOWA DEPARTMENT OF PUBLIC SAFETY
EXISTING UTILITY LOCATIONS
1000+00
CLEANOUT #5 CONNECT TO EXISTING UNDERDRAIN (SEE NOTE 3) STA. 1000+19.60 OS 90.3'L
CLEANOUT #6 CONNECT TO EXISTING UNDERDRAIN (SEE NOTE 3) STA. 1000+19.57

Casey's Service Company Hangar
Ankeny Regional Airport

Ankeny, Iowa 50021

Symbols Legend

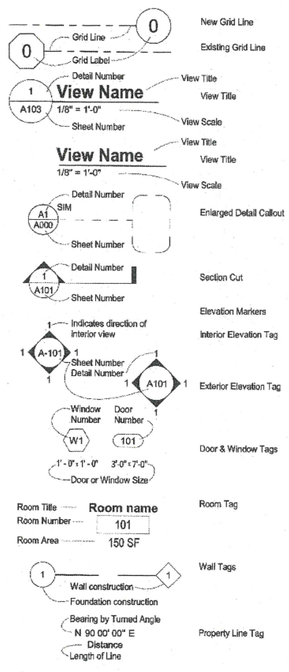

Abbreviations List

A	
&	AND
@	AT
AB	ANCHOR BOLT
AC	AIR CONDITIONING
ACC	ACCESSIBLE
ACT	ACOUSTIC CEILING TILE
ADJ	ADJACENT
AFF	ABOVE FINISHED FLOOR
AGGR	AGGREGATE
ALT	ALTERNATE
ALUM	ALUMINUM
ANOD	ANODIZED
APPROX	APPROXIMATE
ARCH	ARCHITECTURAL
ASPH	ASPHALT
ATTN	ATTENTION
AUTO	AUTOMATIC
AV	AUDIOVISUAL
B	
BD	BOARD
BIT	BITUMINOUS
BLDG	BUILDING
BLKG	BLOCKING
BM	BEAM
BO	BOTTOM OF
BOT	BOTTOM
BRG	BEARING
BRK	BRICK
BRKT	BRACKET
BSMNT	BASEMENT
C	
C	CHANNEL
CAB	CABINET
CB	CEMENT BOARD
CC	CENTER TO CENTER
CCTV	CLOSED CIRCUIT TELEVISION
CEM	CEMENT
CER	CERAMIC
CG	CORNER GUARD
CI	CAST IRON
CIP	CAST-IN-PLACE
CJ	CONTROL JOINT
CL	CENTERLINE
CLG	CEILING
CLR	CLEAR
CNTR	COUNTER
CO	CLEANOUT
COL	COLUMN
CONC	CONCRETE
COND	CONDITION
CONN	CONNECTION
CONST	CONSTRUCTION
CONT	CONTINUOUS
CONTR	CONTRACTOR
COORD	COORDINATE
CORR	CORRIDOR
CPT	CARPET
CT	CERAMIC TILE
CTR	CENTER
CW	COLD WATER
D	
DBL	DOUBLE
DEG	DEGREE
DEMO	DEMOLISH
DEPT	DEPARTMENT
DF	DRINKING FOUNTAIN
DIA	DIAMETER
DIFF	DIFFUSER
DIM	DIMENSION
DISP	DISPENSER
DIV	DIVISION
DMPF	DAMP PROOFING
DN	DOWN
DO	DOOR OPENING
DR	DOOR
DRN	DRAIN
DS	DOWN SPOUT
DTL	DETAIL
DW	DISHWASHER
DWG	DRAWING
DWR	DRAWER
E	
CMU	CONCRETE MASONRY UNIT
E	EAST
EA	EACH
EB	EXPANSION BOLT
EJ	EXPANSION JOINT
EL	ELEVATION
ELEC	ELECTRICAL
ELEV	ELEVATOR
EMER	EMERGENCY
ENCL	ENCLOSURE
ENG	ENGINEER
EP	ELECTRICAL PANEL
EPDM	ETHYLENE PROPYLENE DIENE M-CLASS
EQ	EQUAL
EQUIP	EQUIPMENT
EXH	EXHAUST
EXIST	EXISTING
EXP	EXPANSION
EXPS	EXPOSED
EXT	EXTERIOR
F	
FA	FIRE ALARM
FB	FACE BRICK
FD	FLOOR DRAIN
FD	FLOOR DRAIN
FDC	FIRE DEPARTMENT CONNECTION
FE	FIRE EXTINGUISHER
FEC	FIRE EXTINGUISHER CABINET
FF&E	FURNITURE, FIXTURES AND EQUIPMENT
FHC	FIRE HOSE CABINET
FIN	FINISH
FIXT	FIXTURE
FLASH	FLASHING
FLR	FLOOR
FLUOR	FLUORESCENT
FND	FOUNDATION
FO	FACE OF
FP	FIRE PROTECTION
FR	FIRE RESISTANT
FRC	FIBER REINFORCED CONCRETE
FRT	FIRE RETARDANT TREATED
FT	FEET/FOOT
FTG	FOOTING
FURN	FURNITURE
FURR	FURRING
FWC	FABRIC WALL COVERING
FWP	FABRIC WRAPPED PANEL
G	
GA	GAUGE
GALV	GALVANIZED
GB	GRAB BAR
GC	GENERAL CONTRACT
GEN	GENERAL
GFRC	GLASS FIBER REINFORCED CONCRETE
GL	GLASS
GLAZ	GLAZING
GRAN	GRANULAR
GRD	GROUND
GSM	GALVANIZED SHEET METAL
GV	GAS VALVE
GWB	GYPSUM WALL BOARD
GYP	GYPSUM
H	
HB	HOSE BIBB
HC	HANDICAPPED
HDWD	HARDWOOD
HDWR	HARDWARE
HGT	HEIGHT
HM	HOLLOW METAL
HNDRL	HANDRAIL
HO	HOLD OPEN
HORIZ	HORIZONTAL
HR	HOUR
HRC	HOSE REEL CABINET
HTG	HEATING
HVAC	HEATING VENTILATION AND AIR CONDITIONING
HW	HOT WATER
I	
ID	INSIDE DIAMETER
IN	INCH/INCHES
INCL	INCLUDED/INCLUDING
INFO	INFORMATION
INSUL	INSULATION
INT	INTERIOR
INTERM	INTERMEDIATE
INV	INVERT
J	
JAN	JANITOR
JC	JANITOR'S CLOSET
JST	JOIST
JT	JOINT
K	
KIT	KITCHEN
KO	KNOCK OUT
L	
LAM	LAMINATE
LAV	LAVATORY
LB	POUNDS
LT	LIGHT
M	
MAS	MASONRY
MAX	MAXIMUM
MECH	MECHANICAL
MED	MEDIUM
MFR	MANUFACTURER
MH	MAN HOLE
MIN	MINIMUM
MISC	MISCELLANEOUS
MO	MASONRY OPENING
MTD	MOUNTED
MTG	MOUNTING
MTL	METAL
N	
N	NORTH
NA	NOT APPLICABLE
NIC	NOT IN CONTRACT
NO	NUMBER
NOM	NOMINAL
NTS	NOT TO SCALE
O	
OA	OUTSIDE AIR
OC	ON CENTER
OD	OUTSIDE DIAMETER
OD	OVERFLOW DRAIN
OFCI	OWNER FURNISHED, CONTRACTOR INSTALLED
OFOI	OWNER FURNISHED, OWNER INSTALLED
OH	OVERHEAD
OPG	OPENING
OPP	OPPOSITE
ORD	OVERFLOW ROOF DRAIN
P	
PAV	PAVING
PBD	PARTICLE BOARD
PC	PRECAST
PERF	PERFORATED
PERIM	PERIMETER
PERP	PERPENDICULAR
PL	PLATE
PLAM	PLASTIC LAMINATE
PLAS	PLASTER
PLF	POUNDS PER LINEAR FOOT
PLYWD	PLYWOOD
PNL	PANEL
PNT	PAINT
POL	POLISHED
PR	PAIR
PREFAB	PREFABRICATED
PROJ	PROJECT
PSF	POUNDS PER SQUARE FOOT
PT	PRESSURE TREATED
PTD	PAINTED
PVC	POLYVINYL CHLORIDE
Q	
QT	QUARRY TILE
QTY	QUANTITY
R	
RA	RETURN AIR
RAD	RADIUS
RB	RESILIENT BASE
RBR	RUBBER
RCP	REFLECTED CEILING PLAN
RD	ROOF DRAIN
REC	RECOMMENDED
REF	REFERENCE
REFR	REFRIGERATOR
REG	REGISTER
REINF	REINFORCED
REM	REMOVABLE
REQ	REQUIRE/REQUIRED
RESIL	RESILIENT
REV	REVISION/REVISED
RM	ROOM
RO	ROUGH OPENING
S	
S	SOUTH
SA	SUPPLY AIR
SC	SOLID CORE
SCHED	SCHEDULE
SD	STORM DRAIN
SEC	SECTION
SF	SQUARE FEET/FOOT
SH	SPRINKLER HEAD
SHR	SHOWER
SHT	SHEET
SIM	SIMILAR
SM	SURFACE MOUNTED
SP	STANDPIPE
SPEC	SPECIFICATION
SPKR	SPEAKER
SQ	SQUARE
SS	STAINLESS STEEL
STC	SOUND TRANSMISSION COEFFICIENT
STL	STEEL
STOR	STORAGE
STRG	STRINGER
STRUCT	STRUCTURAL
SUSP	SUSPENDED
SYM	SYMMETRICAL
SYS	SYSTEM
T	
T	TREAD
T&B	TOP AND BOTTOM
T&G	TONGUE AND GROOVE
TB	TOWEL BAR
TBD	TO BE DETERMINED
TEL	TELEPHONE/TELECOM
TEMP	TEMPERED TEMPORARY TEMPERATURE
THK	THICKNESS
THRU	THROUGH
TKBD	TACK BOARD
TLT	TOILET
TO	TOP OF
TOB	TOP OF BEAM
TOC	TOP OF CONCRETE
TOS	TOP OF STEEL
TS	TUBE STEEL
TV	TELEVISION
TYP	TYPICAL
U	
UNFIN	UNFINISHED
UNO	UNLESS NOTED OTHERWISE
UON	UNLESS OTHERWISE NOTED
URNL	URINAL
V	
VAC	VENTILATION AND AIR CONDITIONING
VAR	VARIES
VCT	VINYL COMPOSITION TILE
VERT	VERTICAL
VEST	VESTIBULE
VIF	VERIFY IN FIELD
VP	VISION PANEL
VR	VAPOR RETARDER
VT	VINYL TILE
VWC	VINYL WALL COVERING
W	
W	WEST
W/	WITH
W/O	WITHOUT
WC	WATER CLOSET
WD	WOOD
WIN	WINDOW
WM	WIRE MESH
WP	WATERPROOF/WATERPROOFING
WPM	WATERPROOF MEMBRANE
WS	WEATHER-STRIPPING
WSCT	WAINSCOT
WT	WEIGHT
WWF	WELDED WIRE FABRIC
WWM	WELDED WIRE MESH

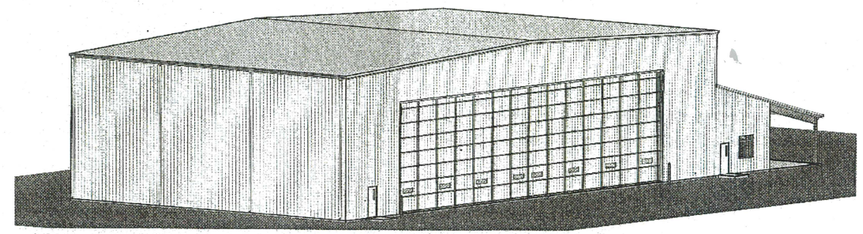

3d Perspective SE Corner

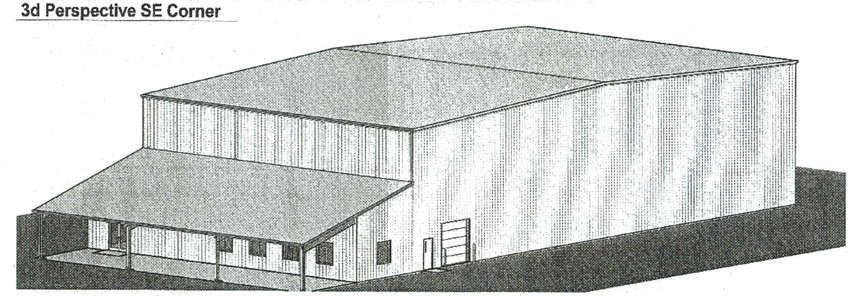

3d Perspective NW Corner

Materials Legend

- Earth
- Earth - Undisturbed
- Gravel
- Sand
- Brick
- Masonry
- Concrete
- Steel
- Aluminum
- Wood - Finish
- Wood - Framing
- Plywood
- Insulation - Rigid
- Insulation - Cellulose
- Insulation - Batt
- Gypsum
- Shingles
- EIFS Finish

Jensen Builders and their consultants have completed these design documents to the level of detail requested by our client. The level of detail may range from schematic design document(s) mainly conveying programming information to fully detailed engineered documents and specifications. However, the clients intent and expectations are that these documents be used as the basis for design for an all-inclusive completed project based upon industry standards for all disciplines and governing authorities requirements.

The Contractor acknowledges by submission of their bid that they have a thorough understanding of the project and of the Owner/Landlord's & Tenant's expectations for a completed project. The Contractor also acknowledges that the Contractor has thoroughly reviewed these documents and has requested of the Owner, Tenant, Architect, Engineers or others any and all clarifications, and has received clear answers to said clarifications, required to resolve outstanding issues related to the completeness and accuracy of the design documents for estimating and construction purposes. The Contractor further acknowledges that the Contractor's bid includes all components of construction, including but not limited to: General Requirements, Concrete, Masonry, Metals, Wood, Plastics, Thermal, Moisture, Openings, Finishes, Fire Suppression, Plumbing, HVAC, Electrical, Communications, Safety, Security, Earthwork, Site, Utilities; for a completed project based upon industry standards for all disciplines and governing authorities requirements. Any and all components not included in this bid are identified on the bid submission as "not included in this contract." The design documents do not represent the means and methods of construction. The Contractor also acknowledges sequencing and means and methods of construction shall be the sole responsibility of the Contractor, and any and all costs associated with the means and methods of construction are included in the base bid.

Drawing Index

GENERAL
G100 Cover Sheet
LS100 Life Safety Plan

STRUCTURAL
S101 Structural Foundation Floor Plan
S102 Structural Details
S103 Structural Details
S104 Structural Details
S105 Structural Details
S106 Structural Details
S107 Structural Details

ARCHITECTURAL
A101 Main Floor Level
A201 Exterior Elevations, Roof Plan
A401 Door & Finish Schedules, Building Sections, Details, Interior Elevations

LICENSED PROFESSIONAL ARCHITECT BRIAN D. PHIPPS 07862 IOWA

I hereby certify that the portion of this technical submission described below was prepared by me or under my direct supervision and responsible charge. I am a duly licensed architect under the laws of the State of Iowa.

Brian D. Phipps A.I.A.

9-3-2024 Date Issued

Signature

Sheets covered by this seal: A101 A201 A401 LS100

Registration Expires: June 30, 2025

LICENSED PROFESSIONAL ENGINEER KEITH C. STORK 12993 IOWA

I hereby certify that this engineering document was prepared by me or under my direct personal supervision and that I am a duly licensed Professional Engineer under the laws of the State of Iowa.

9-3-24 Date Issued

Signature

Keith C. Stork, P.E.

License number 12993

My license renewal date is December 31, 2025

Pages or sheets covered by this seal: S101 - S107

JENSEN BUILDERS Limited SINCE 1963

JENSEN BUILDERS, LTD.

Design-Build General Contractor

1175 South 32nd Street
Fort Dodge, IA 50501
Phone: (515) 573-3292
Fax: (515) 573-5146

2097 NE 60th Avenue
Des Moines, IA 50313
Phone: (515) 292-5000
Fax: (515) 292-5100

www.jensenbuilders.com

Casey's Service Company Hangar
Ankeny Regional Airport
Ankeny, Iowa 50021

#	DATE	DESCRIPTION
1	08-13-2024	Construction Set
2	08-21-2024	Revision 1

PROJECT NO:	24-159
DRAWN BY:	CEB
CHECKED BY:	Checker
CHECKED BY:	

COPYRIGHT: © JENSEN BUILDERS, LTD.

SHEET TITLE

Cover Sheet

G100

ALL IDEAS, DESIGNS, AND DRAWINGS SET FORTH ON THIS SHEET ARE THE ORIGINAL WORK PRODUCT OWNED BY JENSEN BUILDERS, LTD. THESE DRAWINGS ARE COPYRIGHTED BY JENSEN BUILDERS, LTD. AND MAY NOT BE REUSED OR REPRINTED, ELECTRONICALLY OR OTHERWISE, WITHOUT THE EXPRESSED WRITTEN PERMISSION OF JENSEN BUILDERS, LTD.

C:\Users\BrianPhipps\Documents\Casey's Service Co Hangar_bphipps70.rvt 9/3/2024 4:48:08 PM

General Foundation Notes

Ⓐ Refers to Chief anchor bolt "Mark" Chief order number _____

1. All anchor bolts shall conform to ASTM F1554 - 36ksi.
2. Base of all column elevations = 100'-0" unless noted otherwise.
3. Concrete foundations to be 3,000psi - Concrete slabs to be 4,000psi.
4. All reinforcing to be grade 60.
5. #4 bar lap = 2'-0" - #5 bar lap = 3'-4" - #6 bar lap = 4'-0".
6. Foundation design base on 2,000psf soil bearing capacity.
7. Foundation wall reinforcing shall continue through column footings.
8. Changes in elevation for footings and foundation walls are for design intent only. Actual elevations shall be verified with final grade during construction. Maintain 42" minimum frost protection on all footings.
9. All concrete shall be saw cut. If saw cuts are not specified contact Architect or Engineer. If possible saw cut under demising walls.
10. Concrete to be placed over dry sub-grade to prevent heaving in winter.
11. Forms where concrete is to be exposed shall be smooth and free from defects.
12. Exterior paving to be 1 1/2" lower than interior finish floor sloping away from building. Where no paving, top of grade to be a minimum of 6" below finish floor.
13. Concrete slab shall be installed true to a plane with no deviations greater than 1/4" in 10'-0" in any direction and free from blemishes and trowel marks.
14. Apply trowel finish to monolithic slab surface exposed to view and slab surface to be covered with resilient flooring, carpet, ceramic or quarry tile, pain, or another thin film-finish coating system. grind smooth any surface defects that would telegraph through applied floor coverings system.
15. Apply a non-slip finish perpendicular to main traffic route to all exterior concrete platforms, steps, and ramps.
16. All concrete shall be reinforced unless otherwise noted.
17. Prior to commencing work contractor to verify elevation of existing floor. Contractor to ensure alignment of new and existing floor elevations.

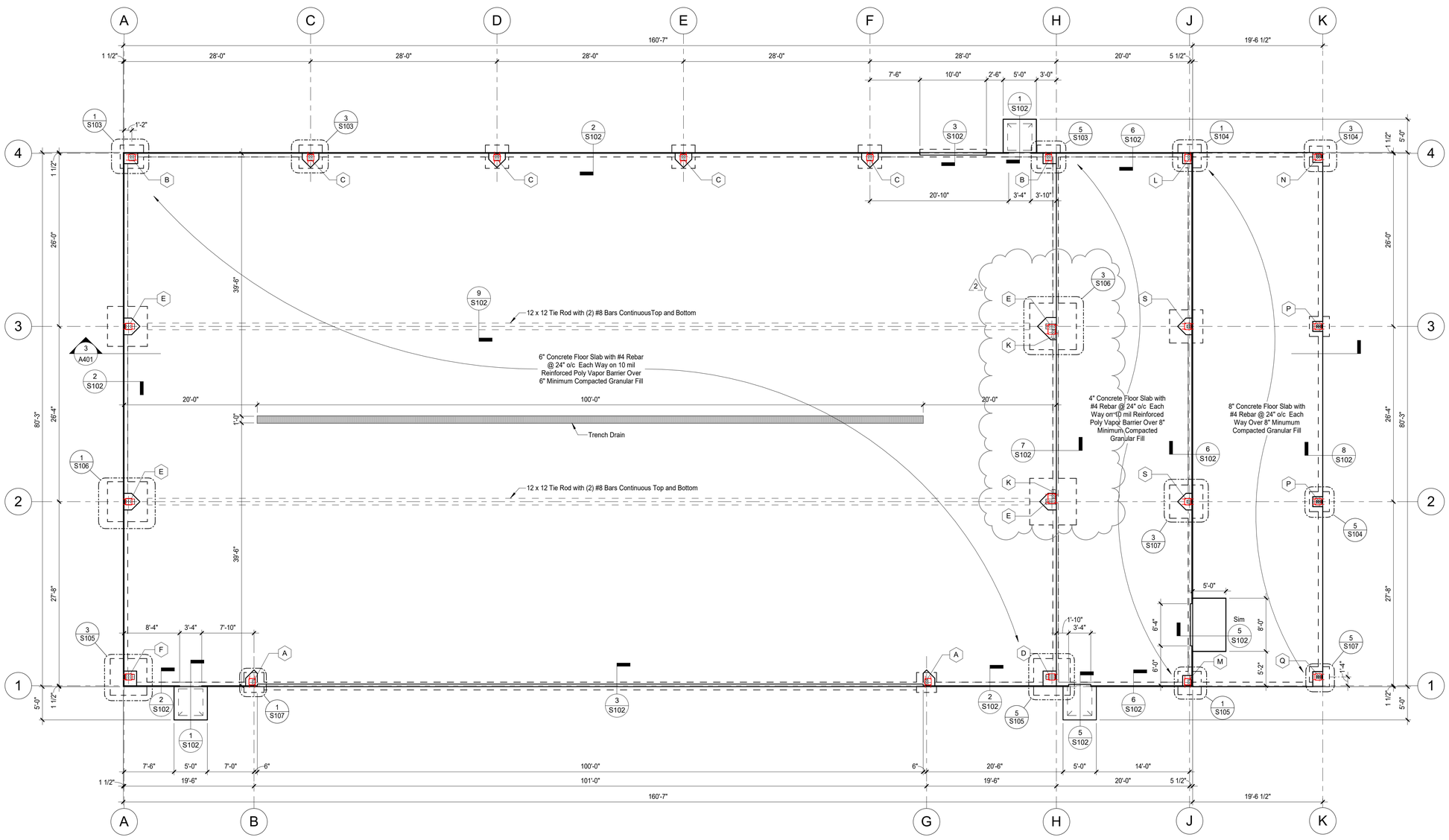

A S101 **Structural Foundation Floor Plan**
1/8" = 1'-0"
1/8" = 1'-0" Scale in Feet
0 4 8 16

JENSEN BUILDERS Limited SINCE 1983

JENSEN BUILDERS, LTD.
Design-Build General Contractor

1175 South 32nd Street
Fort Dodge, IA 50501
Phone: (515) 573-3292
Fax: (515) 573-5146

2097 NE 60th Avenue
Des Moines, IA 50313
Phone: (515) 292-5000
Fax: (515) 292-5100

www.jensenbuilders.com

Casey's Service Company Hangar
Ankeny Regional Airport
Ankeny, Iowa 50021

#	DATE	DESCRIPTION
1	08-13-2024	Construction Set
2	08-21-2024	Revision 1

PROJECT NO:	24-159
DRAWN BY:	CEB
CHECKED BY:	Checker
CHECKED BY:	

COPYRIGHT: ©JENSEN BUILDERS, LTD.

SHEET TITLE

Structural Foundation Floor Plan

S101

C:\Users\BrianPhipps\Documents\Casey's Service Co Hangar_bphipps70.rvt 9/3/2024 4:48:10 PM

ALL IDEAS, DESIGNS, AND DRAWINGS SET FOURTH ON THIS SHEET ARE THE ORIGINAL WORK PRODUCT OWNED BY JENSEN BUILDERS, LTD. THESE DRAWINGS ARE COPYRIGHTED BY JENSEN BUILDERS, LTD AND MAY NOT BE RE-USED OR REPRINTED, ELECTRONICALLY OR OTHERWISE - WITHOUT THE EXPRESSED WRITTEN PERMISSION OF JENSEN BUILDERS, LTD.

C:\Users\BrianPhipps\Documents\Casey's Service Co Hangar_bphipps70.rvt 9/3/2024 4:48:11 PM

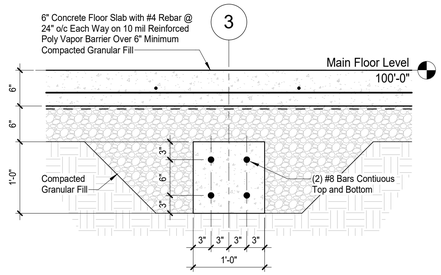

9 S102 **Tie Rod Detail**
1" = 1'-0"

Note:
Maximum Joint Spacing Shall be 30 Times the slab thickness in each direction unless shown otherwise on plan

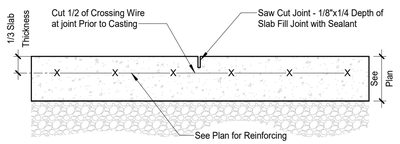

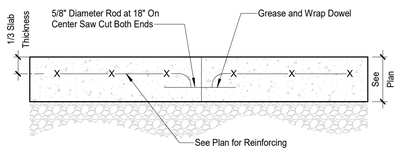

10 S102 **Control Joint**
1 1/2" = 1'-0"

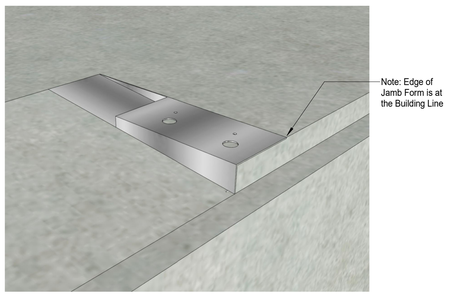

Jensen Jamb Installed Detail

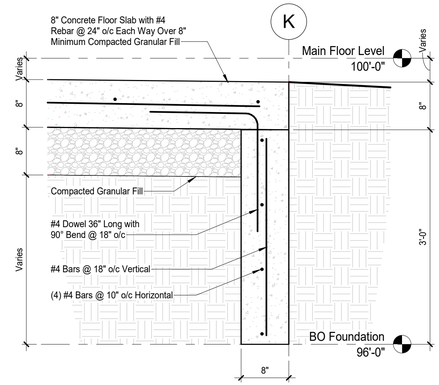

8 S102 **Footing Section at Covered Carport**
1" = 1'-0"

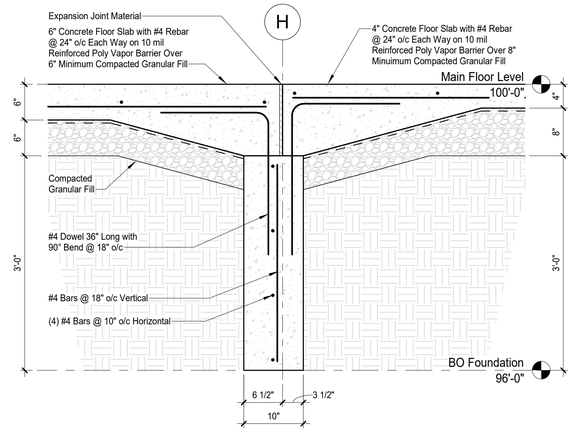

7 S102 **Footing Section at Transition**
1" = 1'-0"

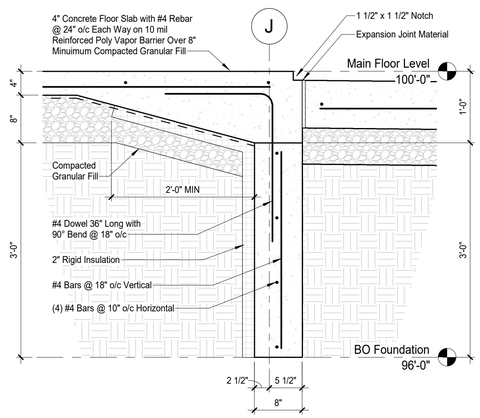

6 S102 **Typical Footing Section @ 4" Slab**
1" = 1'-0"

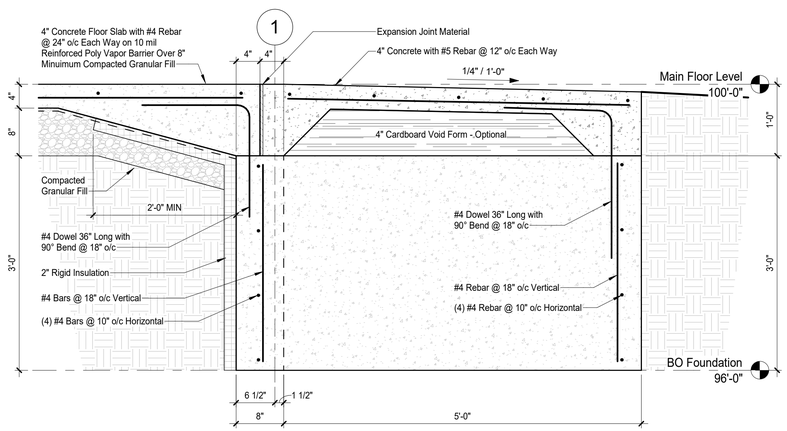

5 S102 **Typical ADA Stoop Section**
1" = 1'-0"

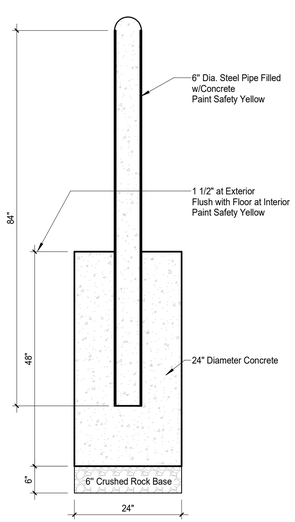

4 S102 **Pipe Bollard Section**
3/4" = 1'-0"

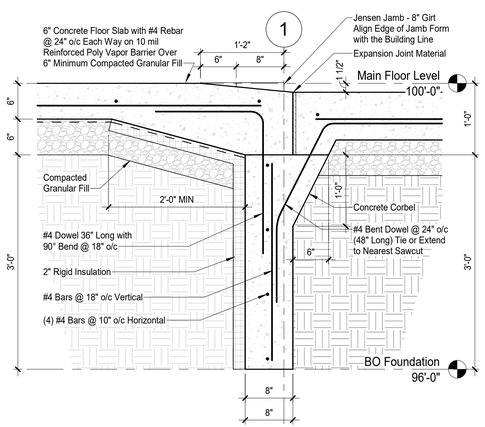

3 S102 **Typical OHD Footing Section**
1" = 1'-0"

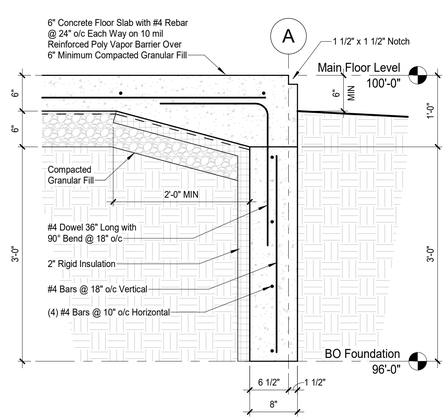

2 S102 **Typical Footing Section @ 6" Slab**
1" = 1'-0"

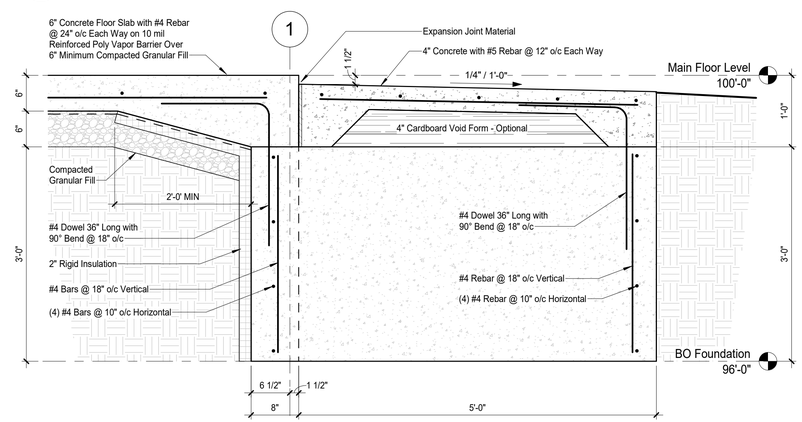

1 S102 **Typical Stoop Section**
1" = 1'-0"

ALL IDEAS, DESIGNS, AND DRAWINGS SET FOURTH ON THIS SHEET ARE THE ORIGINAL WORK PRODUCT OWNED BY JENSEN BUILDERS , LTD. THESE DRAWINGS ARE COPYRIGHTED BY JENSEN BUILDERS , LTD AND MAY NOT BE RE-USED OR REPRINTED, ELECTRONICALLY OR OTHERWISE, WITHOUT THE EXPRESSED WRITTEN PERMISSION OF JENSEN BUILDERS, LTD.

JENSEN Limited BUILDERS SINCE 1983
JENSEN BUILDERS, LTD.
Design-Build General Contractor
1175 South 32nd Street
Fort Dodge, IA 50501
Phone: (515) 573-3292
Fax: (515) 573-5146
2097 NE 60th Avenue
Des Moines, IA 50313
Phone: (515) 292-5000
Fax: (515) 292-5100
www.jensenbuilders.com

Casey's Service Company Hangar
Ankeny Regional Airport
Ankeny, Iowa 50021

#	DATE	DESCRIPTION
1	08-13-2024	Construction Set

PROJECT NO: 24-159
DRAWN BY: CEB
CHECKED BY: Checker
CHECKED BY:
COPYRIGHT: ©JENSEN BUILDERS, LTD.
SHEET TITLE

Structural Details

S102

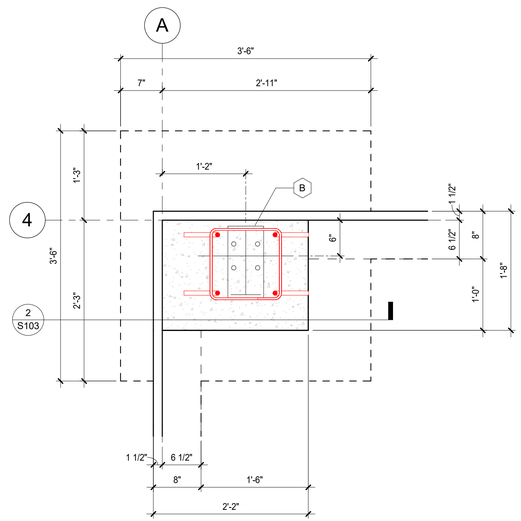

1 S103 **Baseplate Detail A4**
1" = 1'-0"

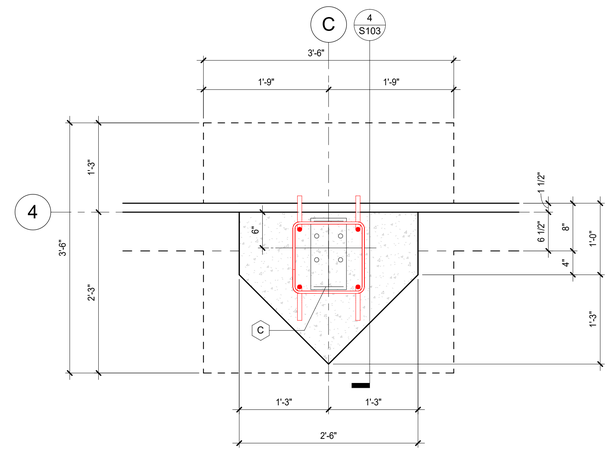

3 S103 **Baseplate Detail C4, D4, E4, F4**
1" = 1'-0"

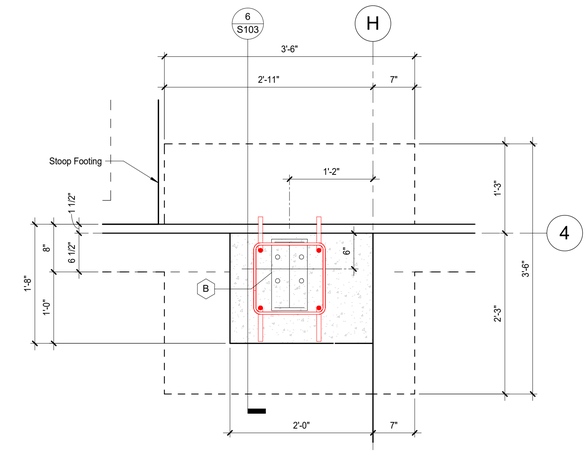

5 S103 **Baseplate Detail H4**
1" = 1'-0"

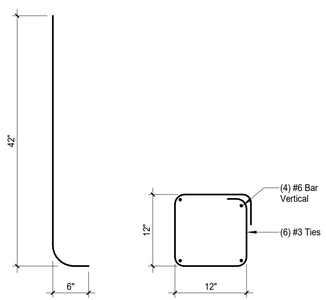

2 S103 **Footing Section A4**
1" = 1'-0"

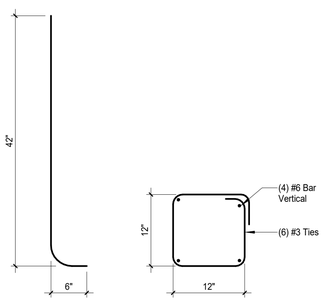

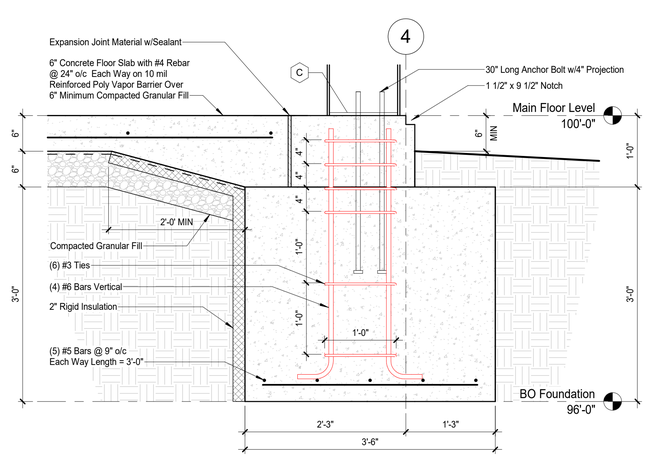

4 S103 **Footing Section C4, D4, E4, F4**
1" = 1'-0"

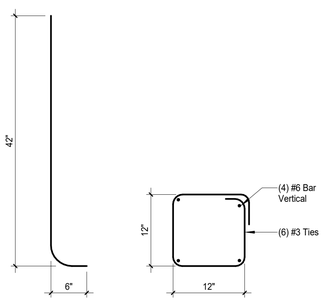

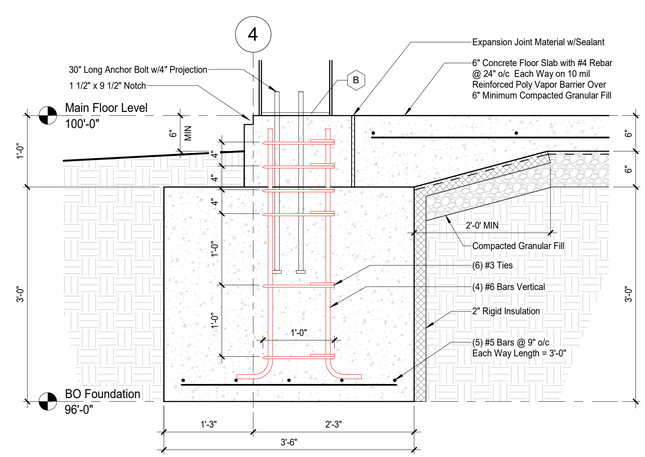

6 S103 **Footing Section H4**
1" = 1'-0"

JENSEN Limited BUILDERS SINCE 1983

JENSEN BUILDERS, LTD.
Design-Build General Contractor

1175 South 32nd Street
Fort Dodge, IA 50501
Phone: (515) 573-3292
Fax: (515) 573-5146

2097 NE 60th Avenue
Des Moines, IA 50313
Phone: (515) 292-5000
Fax: (515) 292-5100

www.jensenbuilders.com

Casey's Service Company Hangar
Ankeny Regional Airport
Ankeny, Iowa 50021

#	DATE	DESCRIPTION
1	08-13-2024	Construction Set

PROJECT NO:	24-159
DRAWN BY:	CEB
CHECKED BY:	Checker
CHECKED BY:	

COPYRIGHT: ©JENSEN BUILDERS, LTD.

SHEET TITLE

Structural Details

S103

C:\Users\BrianPhipps\Documents\Casey's Service Co Hangar_bphipps70.rvt 9/3/2024 4:48:12 PM

ALL IDEAS, DESIGNS, AND DRAWINGS SET FOURTH ON THIS SHEET ARE THE ORIGINAL WORK PRODUCT OWNED BY JENSEN BUILDERS, LTD. THESE DRAWINGS ARE COPYRIGHTED BY JENSEN BUILDERS, LTD AND MAY NOT BE RE-USED OR REPRINTED ELECTRONICALLY OR OTHERWISE, WITHOUT THE EXPRESSED WRITTEN PERMISSION OF JENSEN BUILDERS, LTD.

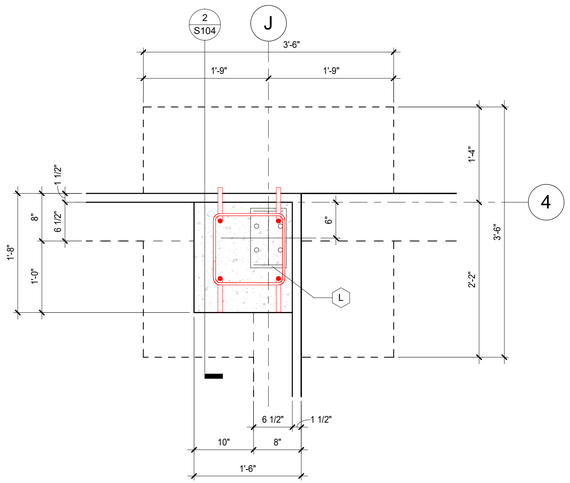

1 S104 **Baseplate Detail J4**
1" = 1'-0"

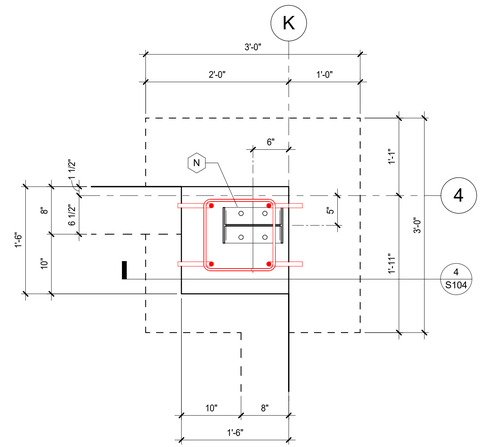

3 S104 **Baseplate Detail K4**
1" = 1'-0"

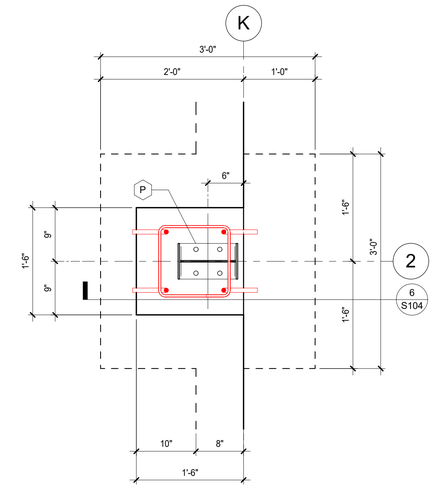

5 S104 **Baseplate Detail K2, K3**
1" = 1'-0"

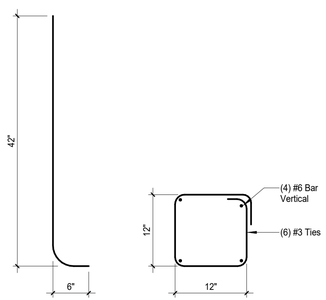

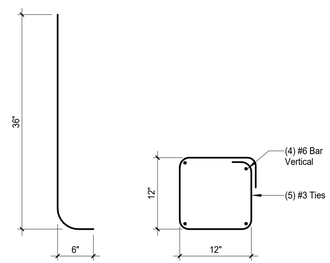

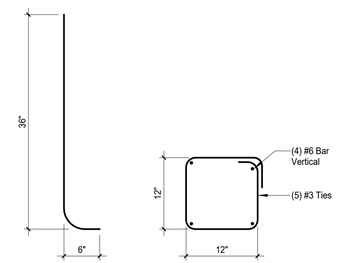

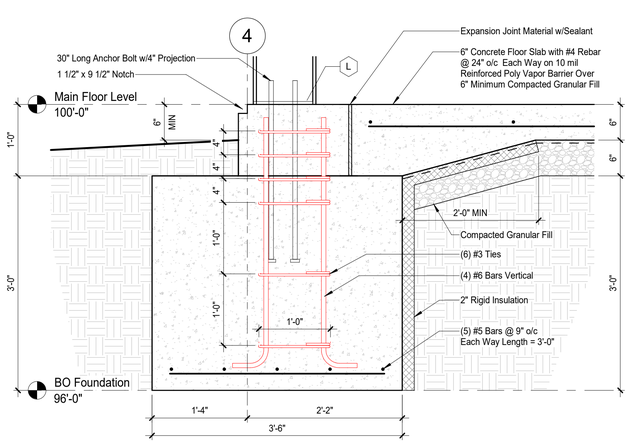

2 S104 **Footing Section J4**
1" = 1'-0"

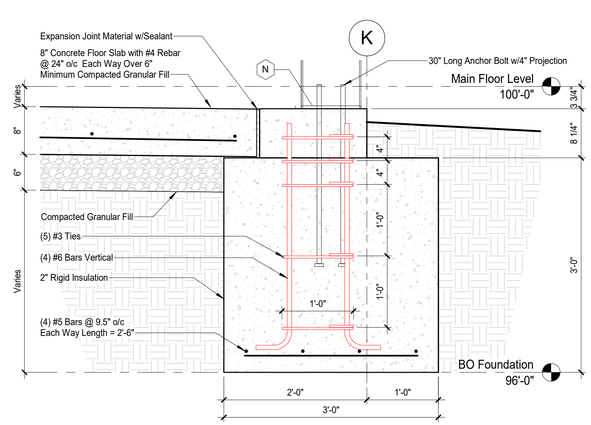

4 S104 **Footing Section K4**
1" = 1'-0"

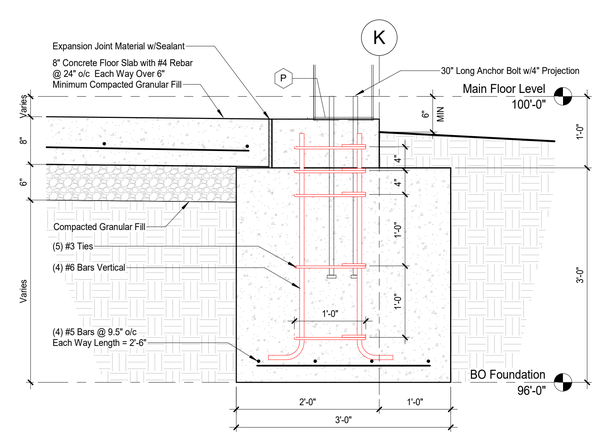

6 S104 **Footing Section K2, K3**
1" = 1'-0"

JENSEN Limited BUILDERS SINCE 1983

JENSEN BUILDERS, LTD.
Design-Build General Contractor

1175 South 32nd Street
Fort Dodge, IA 50501
Phone: (515) 573-3292
Fax: (515) 573-5146

2097 NE 60th Avenue
Des Moines, IA 50313
Phone: (515) 292-5000
Fax: (515) 292-5100

www.jensenbuilders.com

Casey's Service Company Hangar
Ankeny Regional Airport
Ankeny, Iowa 50021

#	DATE	DESCRIPTION
1	08-13-2024	Construction Set

PROJECT NO:	24-159
DRAWN BY:	CEB
CHECKED BY:	Checker
CHECKED BY:	

COPYRIGHT: ©JENSEN BUILDERS, LTD.

SHEET TITLE

Structural Details

S104

C:\Users\BrianPhipps\Documents\Casey's Service Co Hangar_bphipps70.rvt 9/3/2024 4:48:13 PM

ALL IDEAS, DESIGNS, AND DRAWINGS SET FOURTH ON THIS SHEET ARE THE ORIGINAL WORK PRODUCT OWNED BY JENSEN BUILDERS, LTD. THESE DRAWINGS ARE COPYRIGHTED BY JENSEN BUILDERS, LTD AND MAY NOT BE RE-USED OR REPRINTED, ELECTRONICALLY OR OTHERWISE, WITHOUT THE EXPRESSED WRITTEN PERMISSION OF JENSEN BUILDERS, LTD.

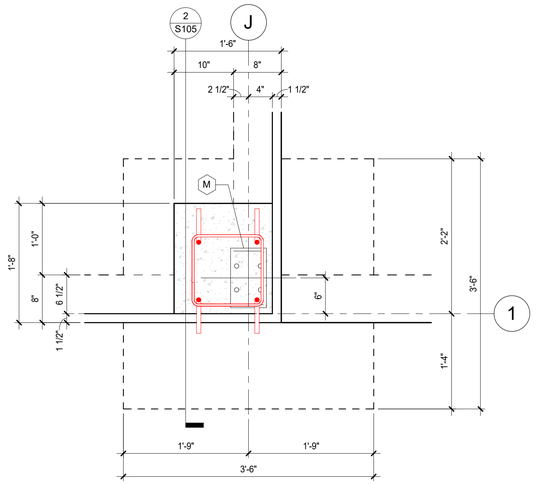

1 S105 **Baseplate Detail J1**
1" = 1'-0"

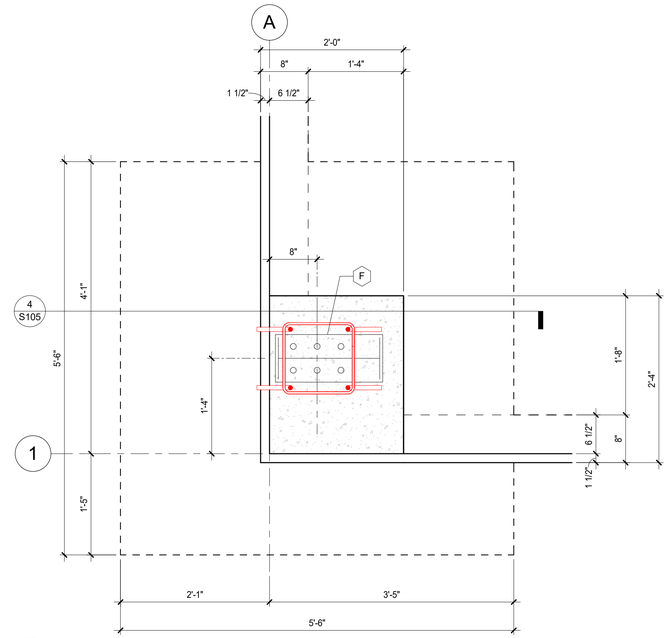

3 S105 **Baseplate Detail A1**
1" = 1'-0"

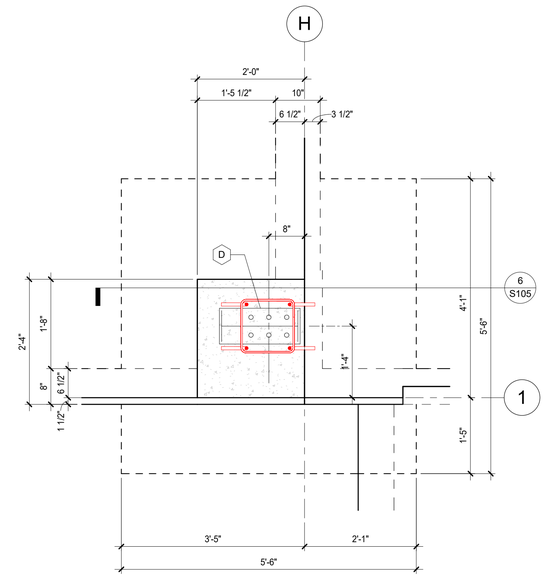

5 S105 **Baseplate Detail H1**
3/4" = 1'-0"

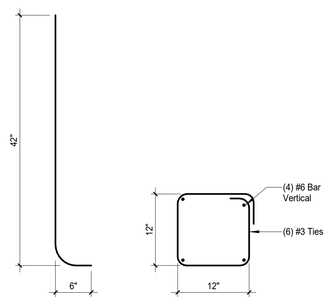

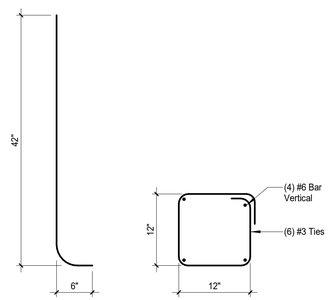

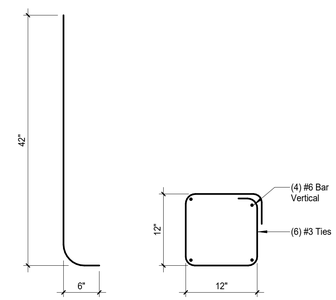

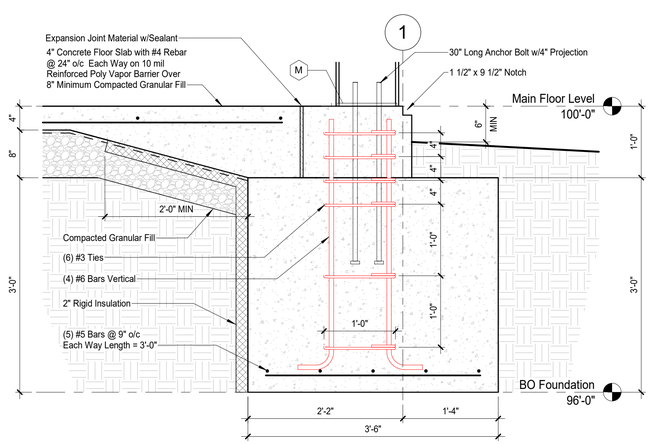

2 S105 **Footing Section J1**
1" = 1'-0"

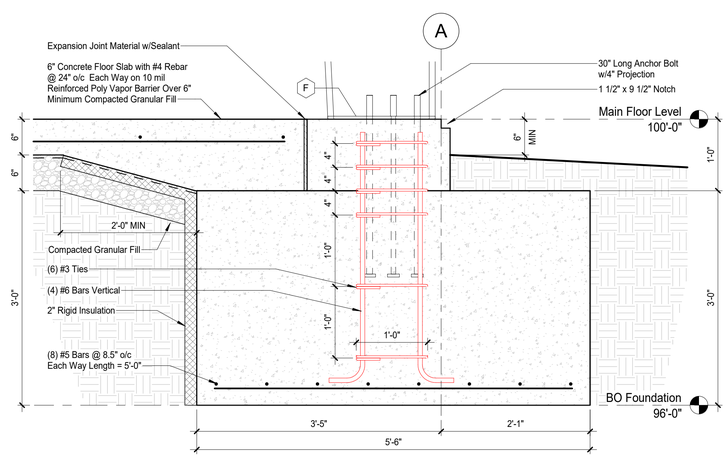

4 S105 **Footing Section A1**
1" = 1'-0"

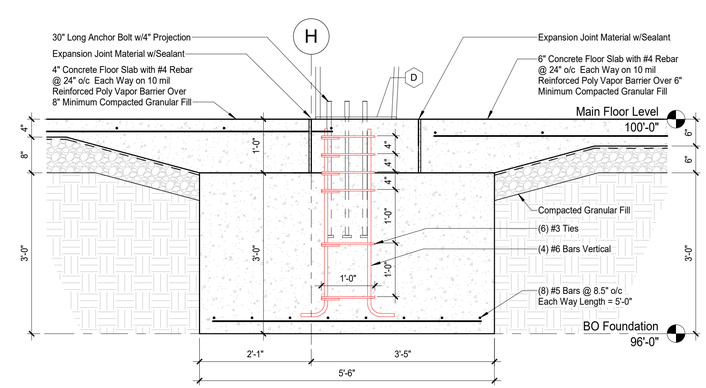

6 S105 **Footing Section H1**
3/4" = 1'-0"

JENSEN BUILDERS
Limited
SINCE 1983
JENSEN BUILDERS, LTD.
Design-Build General Contractor
1175 South 32nd Street
Fort Dodge, IA 50501
Phone: (515) 573-3292
Fax: (515) 573-5146
2097 NE 60th Avenue
Des Moines, IA 50313
Phone: (515) 292-5000
Fax: (515) 292-5100
www.jensenbuilders.com

Casey's Service Company Hangar
Ankeny Regional Airport
Ankeny, Iowa 50021

#	DATE	DESCRIPTION
1	08-13-2024	Construction Set

PROJECT NO: 24-159
DRAWN BY: CEB
CHECKED BY: Checker
CHECKED BY:

COPYRIGHT: ©JENSEN BUILDERS, LTD.

SHEET TITLE

Structural Details

S105

ALL IDEAS, DESIGNS, AND DRAWINGS SET FOURTH ON THIS SHEET ARE THE ORIGINAL WORK PRODUCT OWNED BY JENSEN BUILDERS, LTD. THESE DRAWINGS ARE COPYRIGHTED BY JENSEN BUILDERS, LTD AND MAY NOT BE RE-USED OR REPRINTED ELECTRONICALLY OR OTHERWISE, WITHOUT THE EXPRESSED WRITTEN PERMISSION OF JENSEN BUILDERS, LTD.

C:\Users\BrianPhipps\Documents\Casey's Service Co Hangar_bphipps70.rvt 9/3/2024 4:48:14 PM

C:\Users\BrianPhipps\Documents\Casey's Service Co Hangar_bphipps70.rvt 9/3/2024 4:48:14 PM

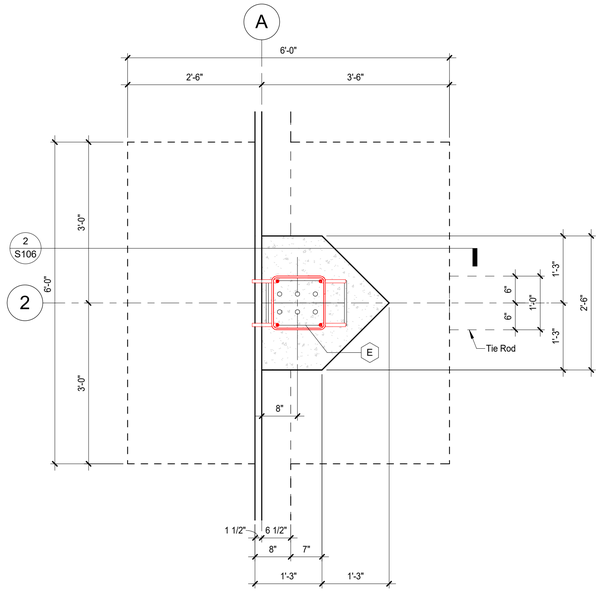

1 S106 **Baseplate Detail A2, A3**
3/4" = 1'-0"

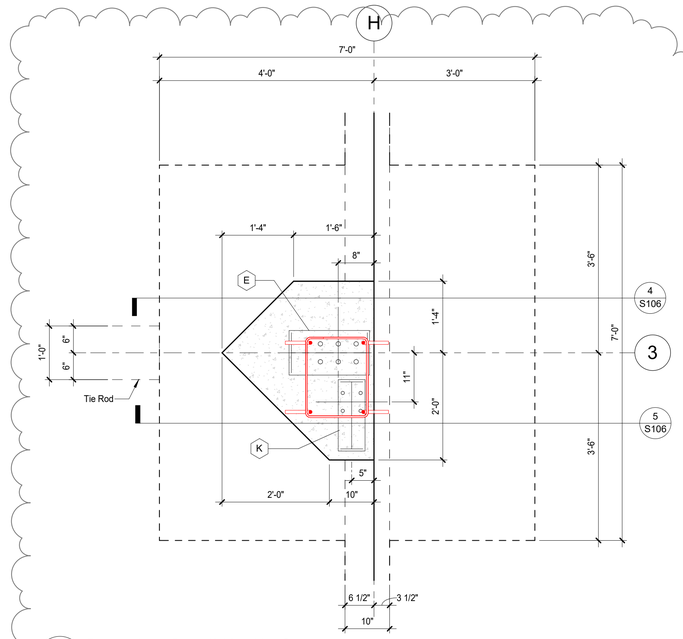

3 S106 **Baseplate Detail H3, H2 Opp**
3/4" = 1'-0"

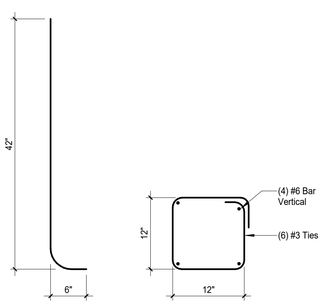

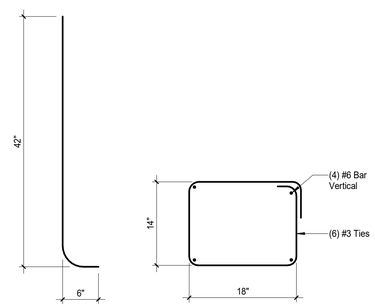

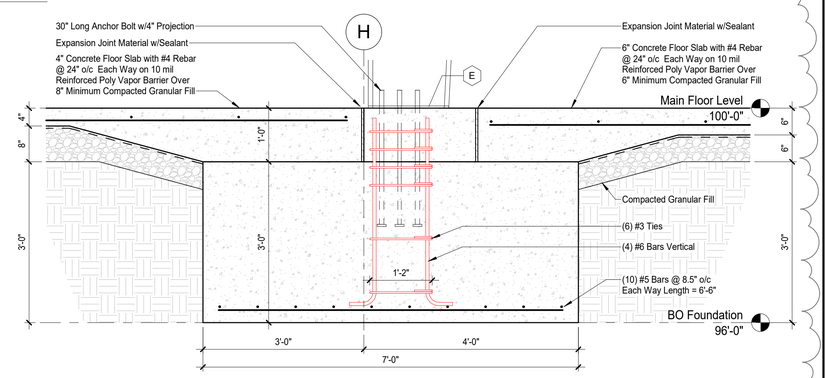

4 S106 **Footing Section H3, H2 Opp Looking South**
3/4" = 1'-0"

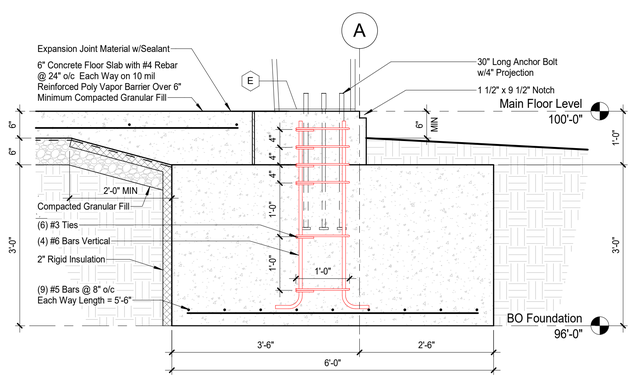

2 S106 **Footing Section A2, A3**
3/4" = 1'-0"

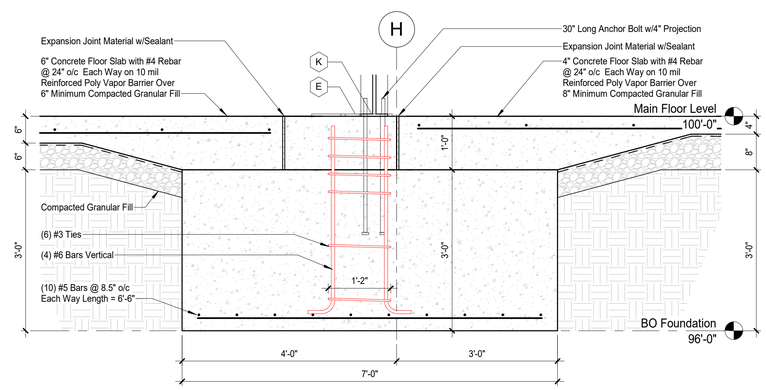

5 S106 **Footing Section H3, H2 Opp Looking North**
3/4" = 1'-0"

JENSEN Limited BUILDERS SINCE 1983
JENSEN BUILDERS, LTD.
Design-Build General Contractor

1175 South 32nd Street
Fort Dodge, IA 50501
Phone: (515) 573-3292
Fax: (515) 573-5146

2097 NE 60th Avenue
Des Moines, IA 50313
Phone: (515) 292-5000
Fax: (515) 292-5100

www.jensenbuilders.com

Casey's Service Company Hangar
Ankeny Regional Airport
Ankeny, Iowa 50021

#	DATE	DESCRIPTION
1	08-13-2024	Construction Set
2	08-21-2024	Revision 1

PROJECT NO:	24-159
DRAWN BY:	CEB
CHECKED BY:	Checker
CHECKED BY:	

COPYRIGHT: ©JENSEN BUILDERS, LTD.

SHEET TITLE

Structural Details

S106

ALL IDEAS, DESIGNS, AND DRAWINGS SET FOURTH ON THIS SHEET ARE THE ORIGINAL WORK PRODUCT OWNED BY JENSEN BUILDERS , LTD. THESE DRAWINGS ARE COPYRIGHTED BY JENSEN BUILDERS, LTD AND MAY NOT BE RE-USED OR REPRINTED, ELECTRONICALLY OR OTHERWISE WITHOUT THE EXPRESSED WRITTEN PERMISSION OF JENSEN BUILDERS, LTD.

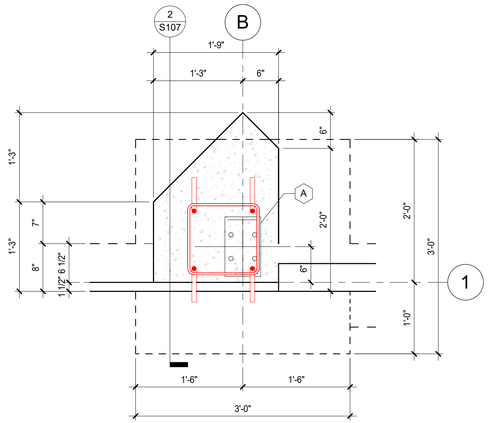

1 S107 **Baseplate Detail B1, G1 Opp**
1" = 1'-0"

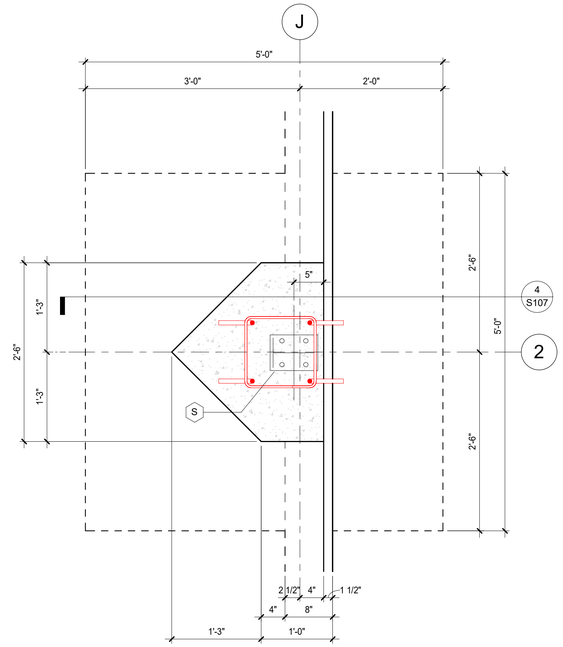

3 S107 **Baseplate Detail J2, J3**
1" = 1'-0"

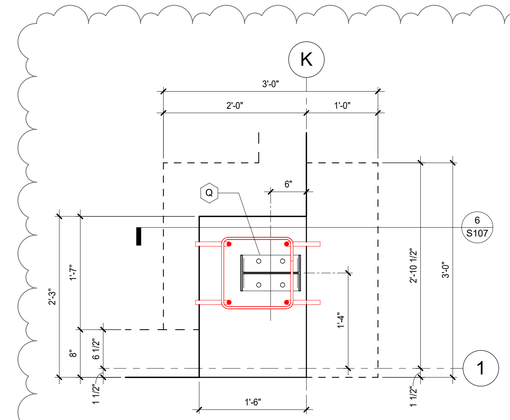

5 S107 **Baseplate Detail K1**
1" = 1'-0"

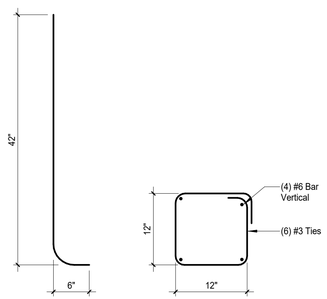

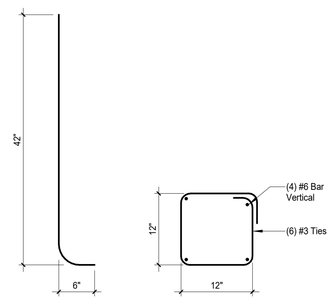

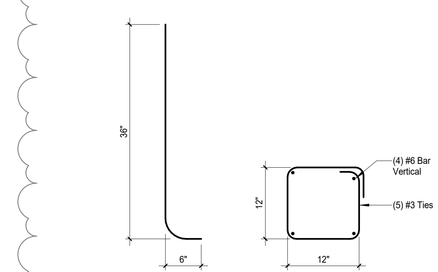

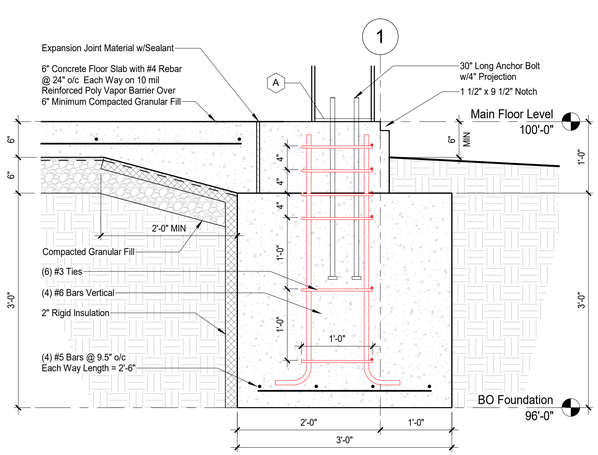

2 S107 **Footing Section B1, G1 Opp**
1" = 1'-0"

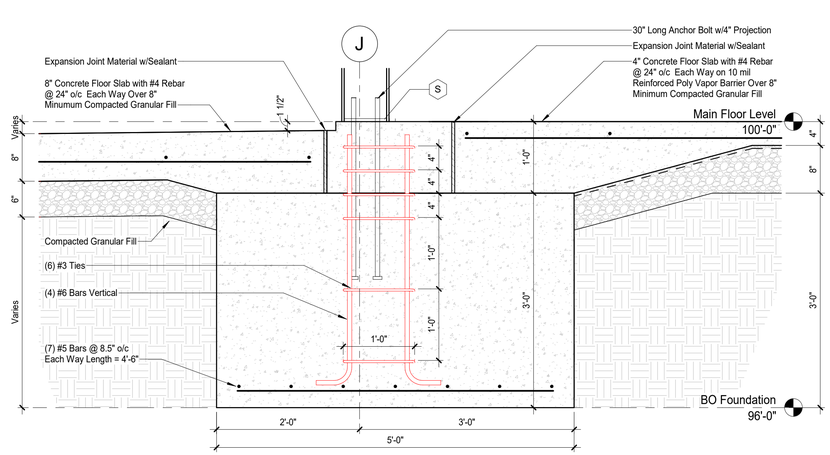

4 S107 **Footing Section J2, J3**
1" = 1'-0"

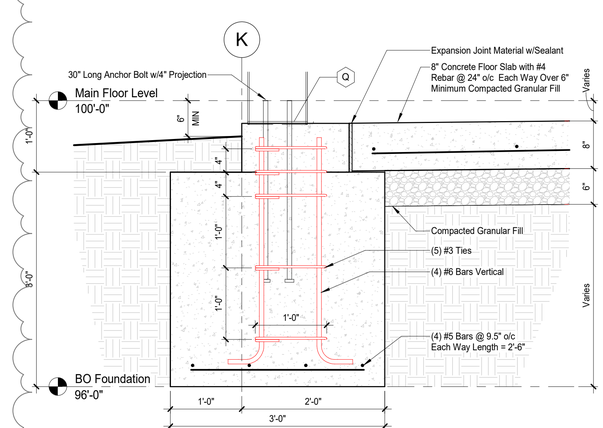

6 S107 **Footing Section K1**
1" = 1'-0"

2

JENSEN Limited BUILDERS SINCE 1983

JENSEN BUILDERS, LTD.
Design-Build General Contractor

1175 South 32nd Street
Fort Dodge, IA 50501
Phone: (515) 573-3292
Fax: (515) 573-5146

2097 NE 60th Avenue
Des Moines, IA 50313
Phone: (515) 292-5000
Fax: (515) 292-5100

www.jensenbuilders.com

Casey's Service Company Hangar
Ankeny Regional Airport
Ankeny, Iowa 50021

#	DATE	DESCRIPTION
1	08-13-2024	Construction Set
2	08-21-2024	Revision 1

PROJECT NO: 24-159
DRAWN BY: CEB
CHECKED BY: Checker
CHECKED BY:

COPYRIGHT: ©JENSEN BUILDERS, LTD.

SHEET TITLE

Structural Details

S107

ALL IDEAS, DESIGNS, AND DRAWINGS SET FOURTH ON THIS SHEET ARE THE ORIGINAL WORK PRODUCT OWNED BY JENSEN BUILDERS, LTD. THESE DRAWINGS ARE COPYRIGHTED BY JENSEN BUILDERS, LTD AND MAY NOT BE RE-USED OR REPRINTED ELECTRONICALLY OR OTHERWISE WITHOUT THE EXPRESSED WRITTEN PERMISSION OF JENSEN BUILDERS, LTD.
C:\Users\BrianPhipps\Documents\Casey's Service Co Hangar_bphipps70.rvt 9/3/2024 4:48:15 PM

General Construction Notes

1. All work shall be completed in accordance with locally adopted building codes and ordinances.
2. Contractor to coordinate their work with the work of all other trades to ensure proper sequencing of installation.
3. Contractor to verify actual dimensions and conditions with respect to the extent of work indicated prior to commencement of this project. Notify the Architect immediately of significant discrepancies which may impact aesthetics, durability, cost and/or schedules.
4. Dimensions are to face of existing finish material, face of new studs or centerline of structure unless noted otherwise.
5. The owner shall be notified of all utility shutoff, temporary or permanent, 48 hours prior to shutoff. All shutoffs shall be coordinated with the owner to minimize the impact on the owner's operations.
6. All site information, fixtures and equipment shown is provided for coordination purposes only. The layout is considered conceptual. Refer to civil, mechanical, electrical, plumbing, fire and life safety, etc.. for specific design information.
7. Provide positive drainage of surface water away from building without ponding of water adjacent to building or on pavements.
8. Contractor to coordinate all above ceiling attic work lighting, ductwork or other systems to ensure interference conditions are avoided.
9. Caulk and seal all expansion - control joints, saw cut joints at all interior and exterior masonry and concrete.
10. Provide adequate wood blocking for millwork, fixtures, equipment, plumbing fixtures and accessories, electric panels. roof access ladder, furniture or by owner items, etc..
11. All openings through walls, floors, ceiling or other that are not being reused or were created during construction shall be patched with like materials and colored to match existing.
12. All conduits, pipes, wiring, rough-in, etc.. should be held as tight as possible to supporting construction, or be kept inside wall cavities. Nothing shall be below the main edge of roof supporting structural components, nothing shall be exposed in finished spaces, nothing shall prevent a smooth finished surface as noted on the drawings - plumbing shall not be ran in exterior walls. Placement coordination between the trades is required.
13. Damage to existing building materials shall be repaired or replaced to the owners satisfaction at the contractor expense.
14. Touch-up and restore finishes where damaged by construction efforts. Remove spilled, splashed and spotted paints or stains from all surfaces. Take care not to mar surfaces during the cleaning process. Remove from the premises rubbish and accumulated materials of any nature not caused by others so as to leave the work area clean, orderly and acceptable condition.

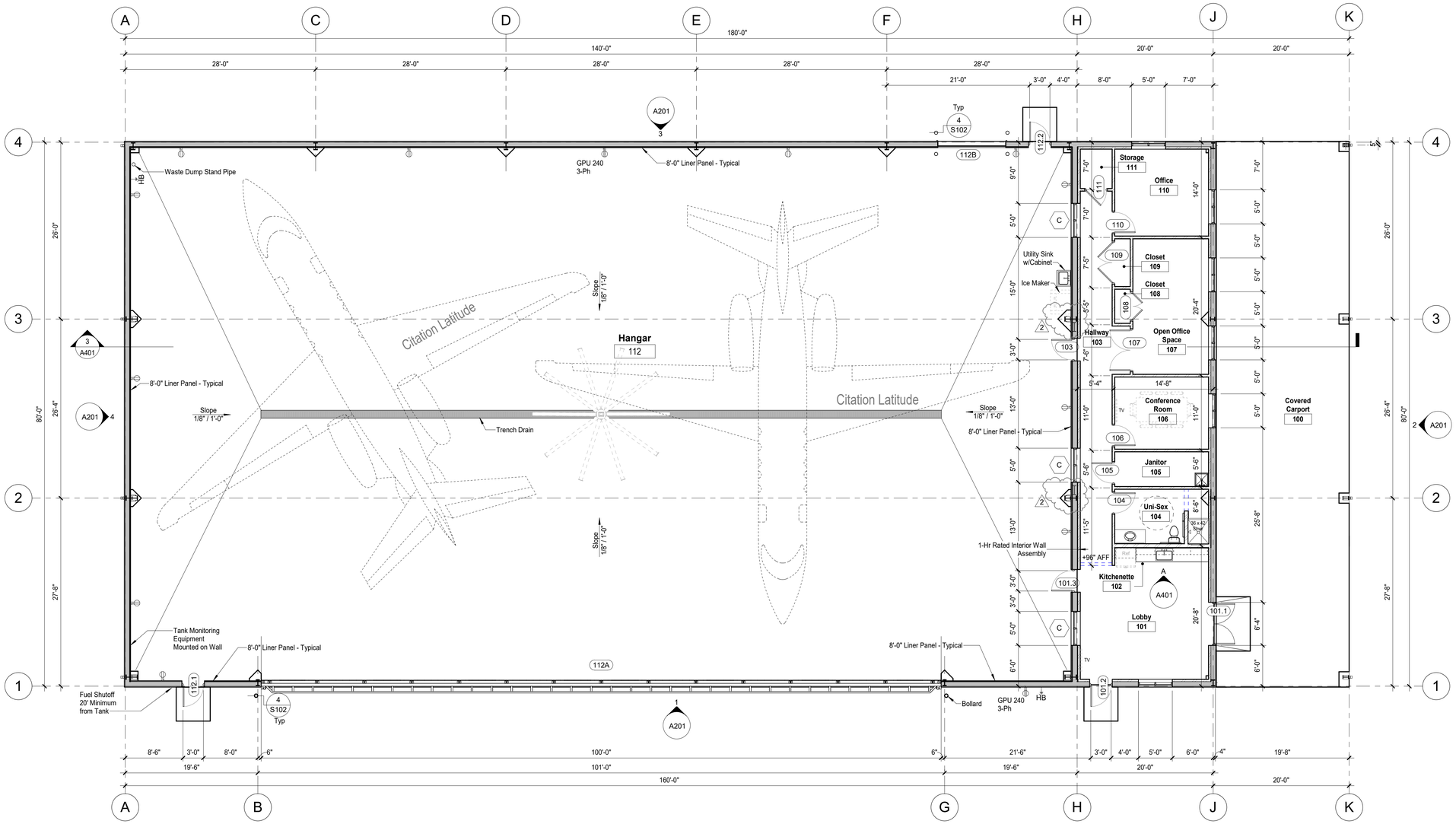

True Plan

A101 **Main Floor Level Plan**
1/8" = 1'-0"
1/8" = 1'-0" Scale in Feet
0 4 8 16

JENSEN Limited BUILDERS SINCE 1983

JENSEN BUILDERS, LTD.
Design-Build General Contractor

1175 South 32nd Street
Fort Dodge, IA 50501
Phone: (515) 573-3292
Fax: (515) 573-5146

2097 NE 60th Avenue
Des Moines, IA 50313
Phone: (515) 292-5000
Fax: (515) 292-5100

www.jensenbuilders.com

Casey's Service Company Hangar
Ankeny Regional Airport
Ankeny, Iowa 50021

#	DATE	DESCRIPTION
1	08-13-2024	Construction Set
2	08-21-2024	Revision 1

PROJECT NO: 24-159
DRAWN BY: CEB
CHECKED BY: Checker
CHECKED BY:

COPYRIGHT: ©JENSEN BUILDERS, LTD.

SHEET TITLE

Main Floor Level

A101

C:\Users\BrianPhipps\Documents\Casey's Service Co Hangar_bphipps70.rvt 9/3/2024 4:48:17 PM

ALL IDEAS, DESIGNS, AND DRAWINGS SET FOURTH ON THIS SHEET ARE THE ORIGINAL WORK PRODUCT OWNED BY JENSEN BUILDERS , LTD. THESE DRAWINGS ARE COPYRIGHTED BY JENSEN BUILDERS , LTD AND MAY NOT BE RE-USED OR REPRINTED, ELECTRONICALLY OR OTHERWISE WITHOUT THE EXPRESSED WRITTEN PERMISSION OF JENSEN BUILDERS, LTD.

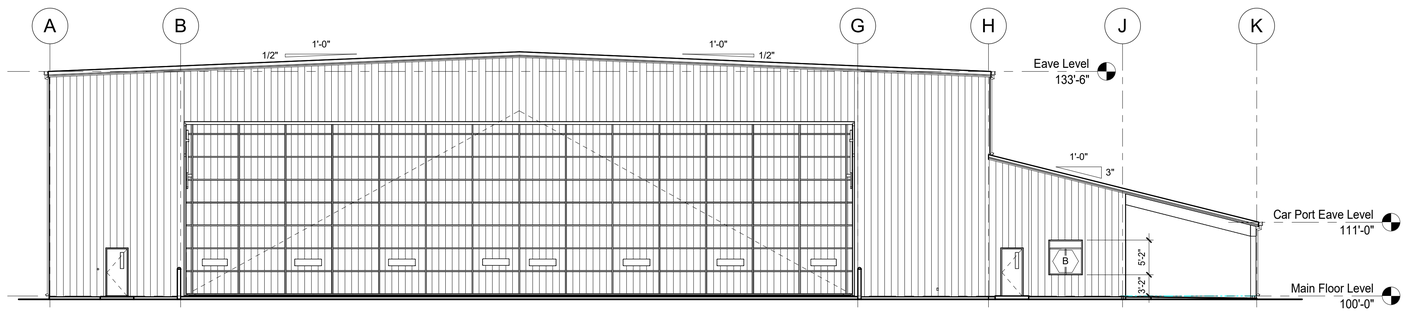

1 A201 **East Elevation**
3/32" = 1'-0"

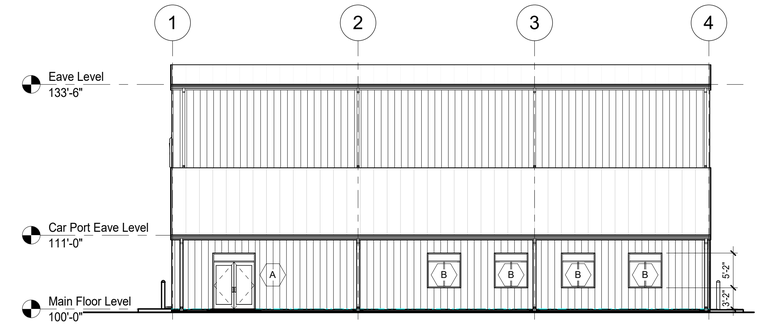

2 A201 **North Elevation**
3/32" = 1'-0"

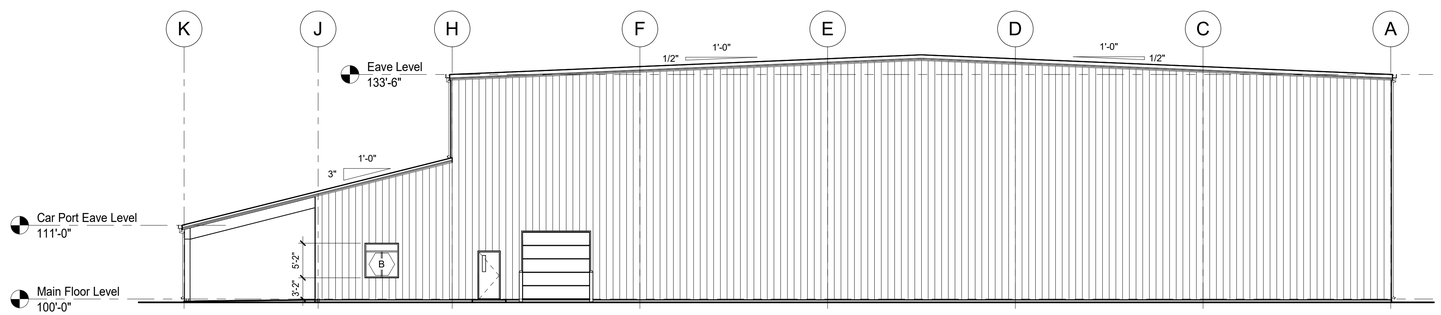

3 A201 **West Elevation**
3/32" = 1'-0"

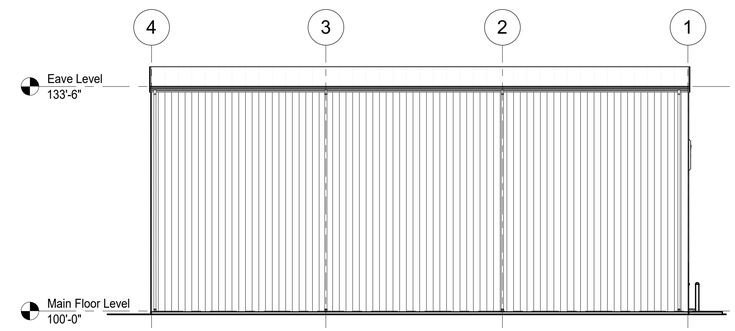

4 A201 **South Elevation**
3/32" = 1'-0"

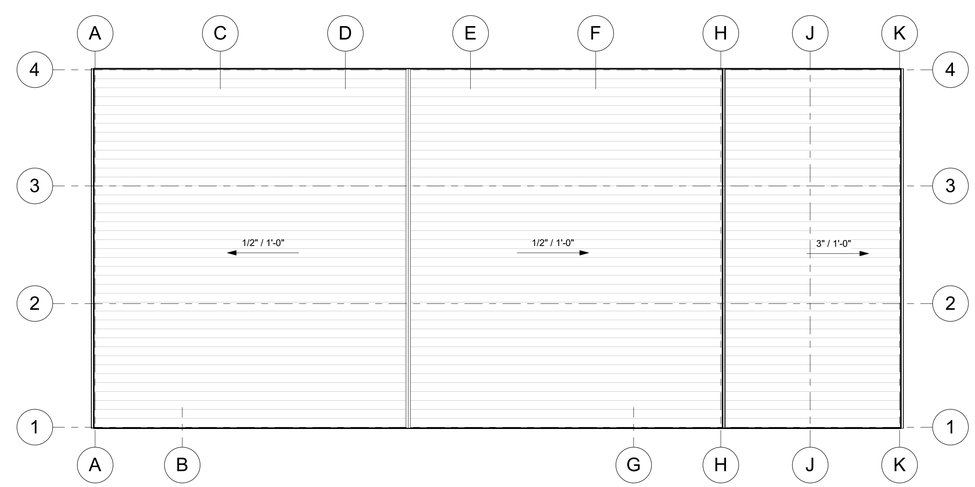

A A201 **Roof Plan**
1/16" = 1'-0"
1/16" = 1'-0" Scale in Feet
0 8 16 32

JENSEN Limited BUILDERS SINCE 1983
JENSEN BUILDERS, LTD.
Design-Build General Contractor

1175 South 32nd Street
Fort Dodge, IA 50501
Phone: (515) 573-3292
Fax: (515) 573-5146

2097 NE 60th Avenue
Des Moines, IA 50313
Phone: (515) 292-5000
Fax: (515) 292-5100

www.jensenbuilders.com

Casey's Service Company Hangar
Ankeny Regional Airport
Ankeny, Iowa 50021

#	DATE	DESCRIPTION
1	08-13-2024	Construction Set

PROJECT NO: 24-159
DRAWN BY: CEB
CHECKED BY: Checker
CHECKED BY:

COPYRIGHT: ©JENSEN BUILDERS, LTD.

SHEET TITLE

Exterior Elevations, Roof Plan

A201

C:\Users\BrianPhipps\Documents\Casey's Service Co Hangar_bphipps70.rvt 9/3/2024 4:48:18 PM

ALL IDEAS, DESIGNS, AND DRAWINGS SET FOURTH ON THIS SHEET ARE THE ORIGINAL WORK PRODUCT OWNED BY JENSEN BUILDERS , LTD. THESE DRAWINGS ARE COPYRIGHTED BY JENSEN BUILDERS , LTD AND MAY NOT BE RE-USED OR REPRINTED ELECTRONICALLY OR OTHERWISE WITHOUT THE EXPRESSED WRITTEN PERMISSION OF JENSEN BUILDERS, LTD.

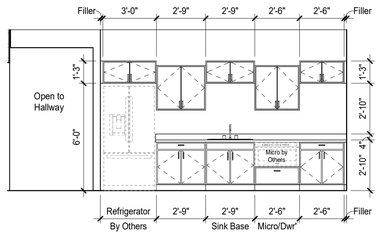

A / A401 **Kitchenette 102 - North**
1/4" = 1'-0"

ROOM FINISH SCHEDULE

Room No	Room Name	Floor	Base	Walls North	Walls East	Walls West	Walls South	Ceilings Height	Ceilings Finish	Remarks
100	Covered Carport	SC	-	Open	Open	Open	LP	Varies	EXPS	
101	Lobby	SC/CPTT	VB	GB/PNT-1	GB/PNT-1	GB/PNT-1	GB/PNT-1	9'-0'	ACT-1	
102	Kitchenette	SC/CPTT	VB	GB/PNT-1	GB/PNT-1	GB/PNT-1	Open	9'-0'	ACT-1	
103	Hallway	SC/CPTT	VB	GB/PNT-1	Open	GB/PNT-1	GB/PNT-1	9'-0'	ACT-1	
104	Uni-Sex	CT	CT	CT,GB/PNT-2	CT,GB/PNT-2	CT,GB/PNT-2	CT,GB/PNT-2	9'-0'	ACT-1	48" CT on Wall
105	Janitor	SC	VB	GB/PNT-1	GB/PNT-1	GB/PNT-1	GB/PNT-1	9'-0'	ACT-1	
106	Conference Room	SC/CPTT	VB	GB/PNT-1	GB/PNT-1	GB/PNT-1	GB/PNT-1	9'-0'	ACT-1	
107	Open Office Space	SC/CPTT	VB	GB/PNT-1	GB/PNT-1	GB/PNT-1	GB/PNT-1	9'-0'	ACT-1	
108	Closet	SC/CPTT	VB	GB/PNT-1	GB/PNT-1	GB/PNT-1	GB/PNT-1	9'-0'	ACT-1	
109	Closet	SC/CPTT	VB	GB/PNT-1	GB/PNT-1	GB/PNT-1	GB/PNT-1	9'-0'	ACT-1	
110	Office	SC/CPTT	VB	GB/PNT-1	GB/PNT-1	GB/PNT-1	GB/PNT-1	9'-0'	ACT-1	
111	Storage	SC/CPTT	VB	GB/PNT-1	GB/PNT-1	GB/PNT-1	GB/PNT-1	9'-0'	ACT-1	
112	Hangar	EP	-	LP	LP	LP	LP	Varies	EXPS	8'-0' Liner Panel

Finish Materials List

FLOORS:
CPTT Carpet Tile, Patcraft, Series Action Planks, Size, Color
EP Epoxy 1/8" thick seamless Chip/Flake or Hybrid flooring system with light traction surface, Brand, Color
CT-1 Ceramic Tile with traction surface, Brand, Style, Color, Latapoxy 2000 Grout
LVT-1 Luxury Vinyl Tile, Patcraft, Subtractive Layers, Size, Color
SC Sealed Concrete

BASE:
COVE 4" High Epoxy 1/8" thick seamless Chip/Flake or Hybrid flooring system
VB Vinyl Base with premolded inside and outside corners, Brand, Color

WALLS:
GB Gypsum Board, Unfinished tape and float only
LP Metal Liner Panel
PNT-1 Paint, Brand, Color
PNT-2 Paint, Brand, Color

CEILINGS:
ACT-1 Lay-in Acoustical Tile Ceiling System, 24"x24" Tile, Sag Resistant, Beveled edge
GB Gypsum Board, Unfinished tape and float only
EXPS Exposed

DOOR AND OPENING SCHEDULE

Door No	Room Name	Door Panel Width	Door Panel Height	Door Panel Thickness	Door Panel Material	Door Panel Type	Door Panel Glazing	Door Panel Door Rating	Door Frame Material	Door Frame Type	Hrd'w Group	Comments
101.1	Lobby	6'-0"	7'-0"	1 3/4"	Alum	D	GL-2		Alum	A		
101.2	Lobby	3'-0"	7'-0"	1 3/4"	HM	B	GL-2		HM	1		
101.3	Lobby	3'-0"	7'-0"	1 3/4"	HM	B	GL-4	45	HM	1		
103	Hallway	3'-0"	7'-0"	1 3/4"	HM	C	GL-4	45	HM	1		
104	Uni-Sex	3'-0"	7'-0"	1 3/4"	HM	A	-		HM	1		
105	Janitor	3'-0"	7'-0"	1 3/4"	HM	A	-		HM	1		
106	Conference Room	3'-0"	7'-0"	1 3/4"	HM	C	GL-3		HM	1		
107	Open Office Space	6'-0"	7'-0"	1 3/4"	HM	C	GL-3		HM	1		
108	Closet	4'-0"	7'-0"	1 3/4"	HM	A	-		HM	1		
109	Closet	6'-0"	7'-0"	1 3/4"	HM	A	-		HM	1		
110	Office	3'-0"	7'-0"	1 3/4"	HM	C	GL-3		HM	1		
111	Storage	3'-0"	7'-0"	1 3/4"	HM	A	-		HM	1		
112.1	Hangar	3'-0"	7'-0"	1 3/4"	HM	B	GL-2		HM	1		
112.2	Hangar	3'-0"	7'-0"	1 3/4"	HM	B	GL-2		HM	1		
112A	Hangar	100'-0"	26'-0"	3"	STL	F	GL-2		STL	1		Single Panel
112B	Hangar	10'-0"	10'-0"	2"	STL	E	-		STL	1		Overhead

General Door and Frame Notes

1. Overall dimensions shown are rough opening sizes only. Manufacturer to allow 3/8" shim space at perimeter.
2. All frames to be 2" nominal frame dimension unless noted otherwise. Actual dimension may vary by manufacturer.
3. All aluminum window and door frames to have factory applied finish as selected by owner.
4. All hollow metal frames to be hot dipped galvanized to prevent deterioration. All hollow metal frames to be factory primed and ready for final painting in field.
5. It shall be the responsibility of the glazing subcontractor to provide safety glass as required by local codes.
6. See details for head, jamb and sill conditions unless noted otherwise.

Door Materials Legend

ALUM Aluminum
HM Hollow Metal
TGL Tempered Glass
STL Steel
WD Wood

GLAZING:
GL-1 Clear, Low E, Insulated, Double Pane
GL-2 Clear, Low E, Insulated, Double Pane, Tempered
GL-3 Clear, Single Pane, Tempered
GL-4 Clear, Single Pane, 45-Minute Fire Resistance Rated, Tempered

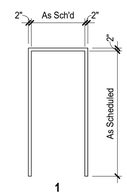

Door Frame Types
1/4" = 1'-0"

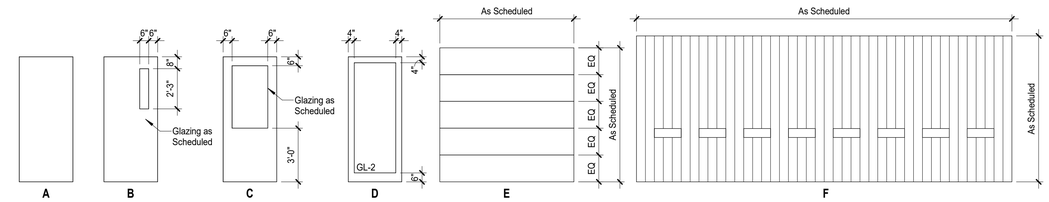

Door Panel Styles
1/4" = 1'-0"

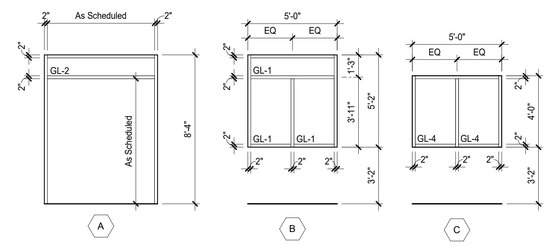

Storefront Frame Types
1/4" = 1'-0"

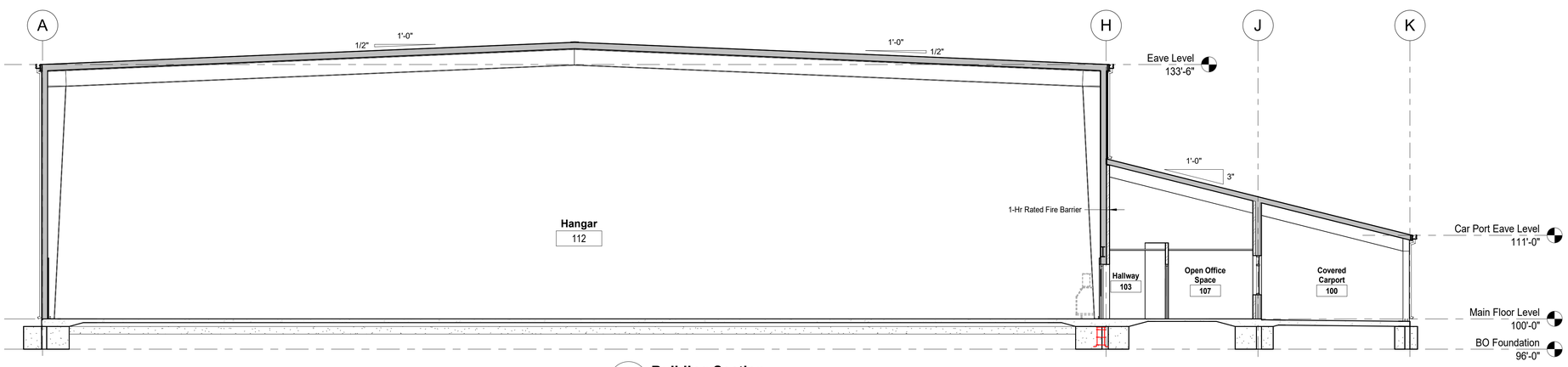

3 / A401 **Building Section**
1/8" = 1'-0"

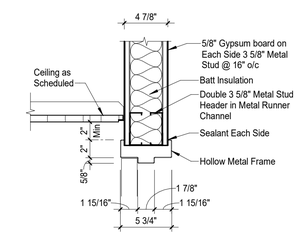

2 / A401 **HM Typ. Interior Door Head Detail**
1 1/2" = 1'-0"

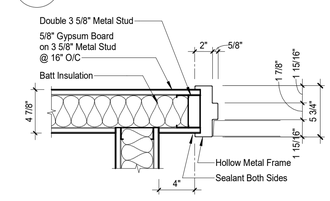

1 / A401 **HM Typ Interior Door Jamb Detail**
1 1/2" = 1'-0"

JENSEN BUILDERS Limited SINCE 1983
JENSEN BUILDERS, LTD.
Design-Build General Contractor
1175 South 32nd Street
Fort Dodge, IA 50501
Phone: (515) 573-3292
Fax: (515) 573-5146
2097 NE 60th Avenue
Des Moines, IA 50313
Phone: (515) 292-5000
Fax: (515) 292-5100
www.jensenbuilders.com

Casey's Service Company Hangar
Ankeny Regional Airport
Ankeny, Iowa 50021

#	DATE	DESCRIPTION
1	08-13-2024	Construction Set

PROJECT NO: 24-159
DRAWN BY: CEB
CHECKED BY: Checker
CHECKED BY:
COPYRIGHT: ©JENSEN BUILDERS, LTD.
SHEET TITLE

Door & Finish Schedules, Building Sections, Details, Interior Elevations

A401

ALL IDEAS, DESIGNS, AND DRAWINGS SET FOURTH ON THIS SHEET ARE THE ORIGINAL WORK PRODUCT OWNED BY JENSEN BUILDERS, LTD. THESE DRAWINGS ARE COPYRIGHTED BY JENSEN BUILDERS, LTD AND MAY NOT BE RE-USED OR REPRINTED, ELECTRONICALLY OR OTHERWISE, WITHOUT THE EXPRESSED WRITTEN PERMISSION OF JENSEN BUILDERS, LTD.
C:\Users\BrianPhipps\Documents\Casey's Service Co Hangar_bphipps70.rvt 9/3/2024 4:48:19 PM

ALL IDEAS, DESIGNS, AND DRAWINGS SET FOURTH ON THIS SHEET ARE THE ORIGINAL WORK PRODUCT OWNED BY JENSEN BUILDERS , LTD. THESE DRAWINGS ARE COPYRIGHTED BY JENSEN BUILDERS, LTD AND MAY NOT BE RE-USED OR REPRINTED ELECTRONICALLY OR OTHERWISE WITHOUT THE EXPRESSED WRITTEN PERMISSION OF JENSEN BUILDERS, LTD.

C:\Users\BrianPhipps\Documents\Casey's Service Co Hangar_bphipps70.rvt 9/3/2024 4:48:20 PM

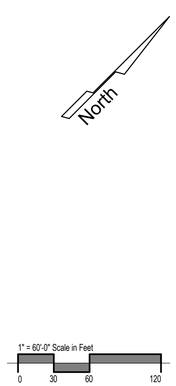

JENSEN Limited BUILDERS
SINCE 1983
JENSEN BUILDERS, LTD.
Design-Build General Contractor

1175 South 32nd Street
Fort Dodge, IA 50501
Phone: (515) 573-3292
Fax: (515) 573-5146

2097 NE 60th Avenue
Des Moines, IA 50313
Phone: (515) 292-5000
Fax: (515) 292-5100

www.jensenbuilders.com

Casey's Service Company Hangar
Ankeny Regional Airport
Ankeny, Iowa 50021

#	DATE	DESCRIPTION

PROJECT NO:	24-159
DRAWN BY:	CEB
CHECKED BY:	Checker
CHECKED BY:	

COPYRIGHT: ©JENSEN BUILDERS, LTD.

SHEET TITLE

Site Plan

C101

C:\Users\BrianPhipps\Documents\Casey's Service Co Hangar_bphipps70.rvt 9/3/2024 4:48:22 PM

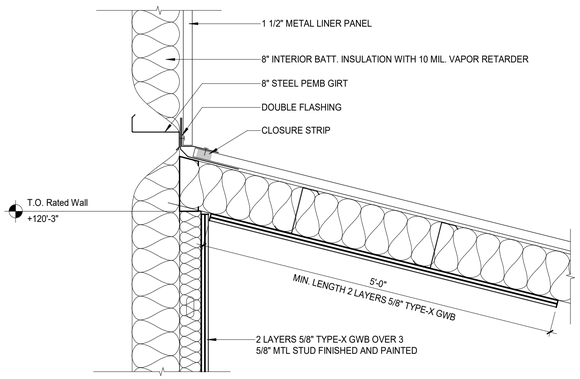

2 LS100 **Wall Section @ Fire Rated Wall/Roof Intersection**
1" = 1'-0"

CODE SUMMARY

2021 ANKENY BUILDING AND ENERGY CODE
2021 ANKENY MECHANICAL CODE
2020 NATIONAL ELECTRIC CODE
2021 ANKENY FIRE CODE
2021 ANKENY FUEL GAS CODE
2021 ANKENY PLUMBING CODE
2021 ANKENY EXISTING BUILDING CODE
2010 AMERICANS WITH DISABILITIES ACT
2016 NFPA 409 STANDARD ON AIRCRAFT HANGARS

BUILDING TYPE
CONSTRUCTION TYPE: III-B (SPRINKLED)
ALLOWABLE BUILDING HEIGHT : 55 FEET
ALLOWABLE NUMBER OF STORIES: 2

OCCUPANCY
STORAGE(S-1) - AIRCRAFT HANGAR
BUSINESS(B) - OFFICE

GROSS BUILDING AREA
9,600SF GROSS/ALLOWABLE 17,500 PER IBC TABLE 506.2.

OCCUPANT LOAD

AIRCRAFT HANGAR	22 Occupants
OFFICE	38 Occupants
TOTAL:	**79 Occupants**

FIXTURE COUNT REQUIRED:
MEN = *1*
WOMEN = *1*

PROVIDED:
WC = 1 UNISEX
LAV = 1
DRINKING FOUNTAIN = 0
SERVICE SINK = 1

REF. IBC SECTIONS:
412.3 AIRCRAFT HANGARS
412.3.1 EXTERIOR WALLS MORE THAN 30' FROM PUBLIC WAY AND LOT LINES - WALLS DO NOT NEED TO HAVE 2 HOUR FIRE-RESISTANCE RATING.
412.3.2 FLOOR SHOULD BE GRADED AND DRAINED TO PREVENT WATER OR FUEL FROM REMAINING ON FLOOR. FLOOR DRAINS SHALL DISCHARGE THROUGH AN OIL SEPARATOR TO THE SEWER OR TO AN OUTSIDE VENTED SUMP.
412.3.4 HEATING EQUIPMENT - EXCEPTION 1 - UNIT HEATERS SUSPENDED NOT LESS THAN 10 FEET ABOVE THE UPPER SURFACE OF WINGS OR ENGINE ENCLOSURES OF THE HIGHEST AIRCRAFT THAT ARE PERMITTED TO BE HOUSED IN THE HANGAR NEED NOT BE LOCATED IN A SECOND ROOM PROVIDED THEY ARE MOUNTED NOT LESS THAN 8 FEET ABOVE FLOOR IN SHOPS, OFFICES, AND OTHER SECTIONS OF HANGAR COMMUNICATING WITH STORAGE OR SERVICE AREAS.
412.3.5 "DOPING", PAINTING, FUELING ETC. WILL TAKE PLACE IN OTHER, DETACHED BUILDING(S) OR OUTDOORS.
412.3.6 FIRE SUPPRESSION GROUP III PER IBC TABLE 412.3.6
508.4 FIRE SEPARATION NOT REQUIRED BETWEEN S-1 AND B OCCUPANCIES PER TABLE 508.4.
903.2.9 SPRINKLER SYSTEM NOT REQUIRED FOR S-1 OCCUPANCY OF THIS BUILDINGS SQUARE FOOTAGE.
906 PORTABLE FIRE EXTINGUISHER REQUIREMENTS
907.2 NEW BUILDING MUST HAVE ONE MANUAL FIRE ALARM BOX IN AN APPROVED LOCATION.
918.1 EMERGENCY RESPONDER RADIO COVERAGE SHALL BE PROVIDED PER SECTION 510 OF IFC.
1006.2 AND **TABLE 1006.2.1** - 100 FEET MAXIMUM COMMON PATH OF EGRESS TRAVEL DISTANCE FOR SPACES WITH 1 EXIT.
1010.1 EXTERIOR EGRESS DOORS TO BE 32 INCHES CLEAR WIDTH MINIMUM
1016.2 MEANS OF EGRESS ALLOWED THROUGH ADJOINING ROOM IN S OCCUPANCY BUILDINGS
1017.2 EXIT ACCESS TRAVEL DISTANCE - 200 FEET
1603 - ROOF LIVE LOAD - 20 PSF
GROUND SNOW LOAD - 30 PSF
RISK CATEGORY II
ULTIMATE DESIGN WIND SPEED - 115MPH
NOMINAL DESIGN WIND SPEED - 89MPH
SEISMIC DESIGN CATEGORY - A

2021 IFC SECTIONS
SECTION 20 IN ITS ENTIRETY
2003.2 NO SMOKING POSTED SIGNS PER SECTION 310
2004.5 AIRCRAFT ENGINES NOT TO BE RUN INSIDE HANGAR

FIRE PROTECTION FEATURES NFPA 101

AUTOMATIC SPRINKLER SYSTEM:	REQUIRED/PROVIDED
FIRE ALARM:	REQUIRED/PROVIDED
FIRE EXTINGUISHERS:	REQUIRED/PROVIDED
EXIT SIGNS:	REQUIRED/PROVIDED

FIRE PROTECTION 2016 NFPA 409
6.1.3 GROUP III AIRCRAFT HANGAR
TABLE 6.1.3 - MAXIMUM FIRE AREA FOR TYPE III (200) CONSTRUCTION 12,000SF
10.2.2 PARTITIONS AND CEILINGS SEPARATING AIRCRAFT STORAGE AND SERVICING AREAS FROM OTHER AREAS(OFFICES) SHALL HAVE AT LEAST A 1-HOUR FIRE RESISTANCE RATING WITH OPENINGS PROTECTED BY LISTED FIRE DOORS HAVING A FIRE RESISTANCE RATING OF AT LEAST 45 MINUTES.
HEATERS TO BE INSTALLED 10FT MIN. ABOVE UPPER SURFACE OF WINGS OR ENGINE ENCLOSURE.

LIFE SAFETY PLAN SYMBOLS

ROOM TAG
ROOM AREA
OCCUPANCY LOAD FACTOR
OCCUPANCY LOAD

DOOR TAG
OCCUPANT LOAD
MAXIMUM OCCUPANT LOAD

HORN STROBE
EXIT SIGN
FEC — FIRE EXTINGUISHER CABINET
FE — FIRE EXTINGUISHER
EXTERIOR EGRESS LIGHT
EMERGENCY LIGHT
FIRE PULL STATION
STROBE
KB — KNOX BOX
FDC — FIRE DEPARTMENT CONNECTION

1-HR FIRE BARRIER - OCCUPANCY SEPARATION
1-HR RATED WALL CONSTRUCTION / 3/4-HR RATED DOORS
2-HR FIRE BARRIER - OCCUPANCY SEPARATION
2-HR RATED WALL CONSTRUCTION / 1 1/2-HR RATED DOORS
3-HR FIRE BARRIER - OCCUPANCY SEPARATION
3-HR RATED WALL CONSTRUCTION / 3-HR RATED DOORS
4-HR FIRE BARRIER - OCCUPANCY SEPARATION
OPENINGS NOT PERMITTED

***SEE DOOR SCHEDULE FOR DOOR HARDWARE AND OPENING SIZES

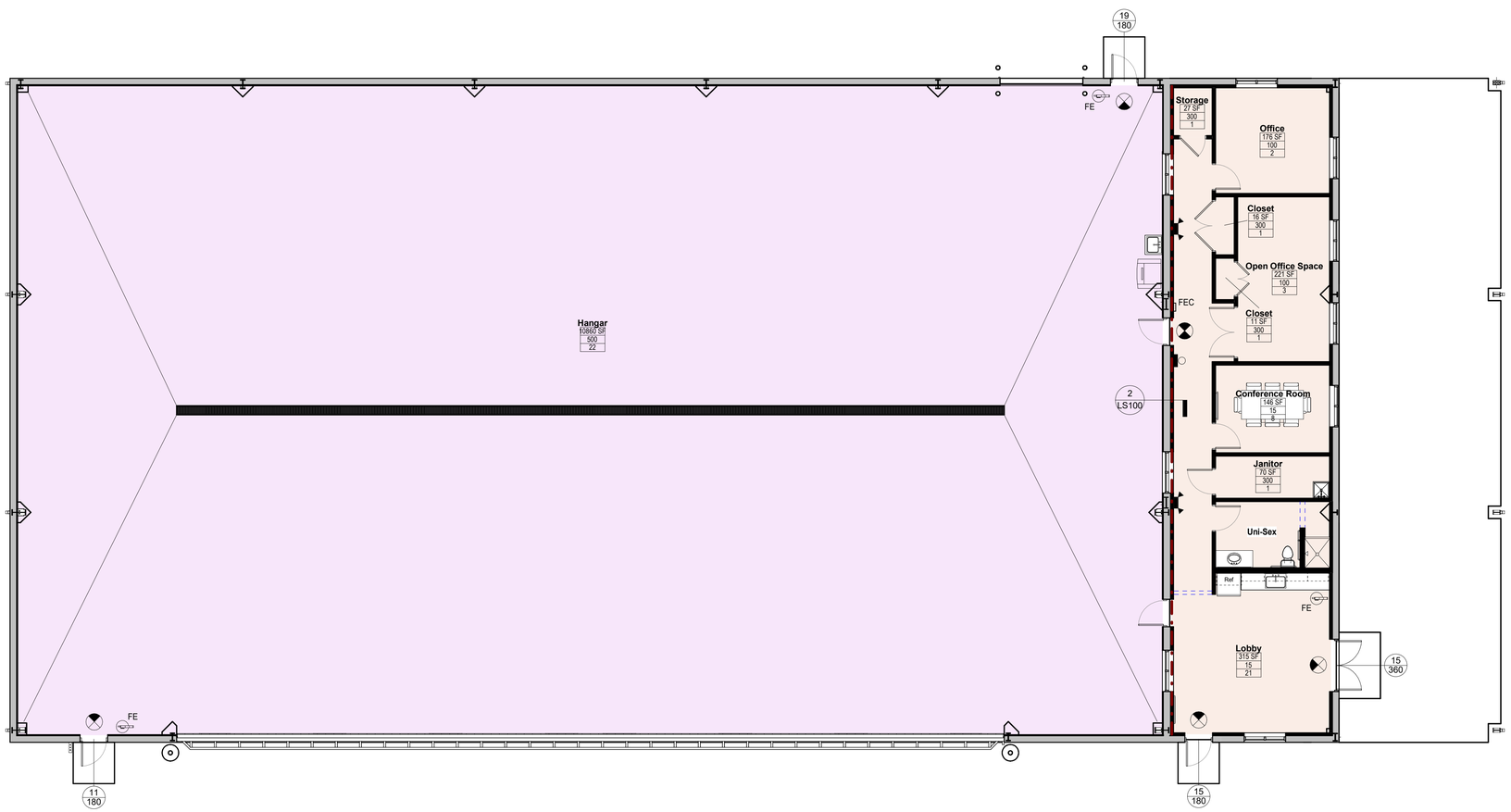

1 LS100 **Life Safety Plan**
1/8" = 1'-0"

Department Legend

B Occupancy
S1 Occupancy

JENSEN Limited BUILDERS SINCE 1983
JENSEN BUILDERS, LTD.
Design-Build General Contractor
1175 South 32nd Street
Fort Dodge, IA 50501
Phone: (515) 573-3292
Fax: (515) 573-5146
2097 NE 60th Avenue
Des Moines, IA 50313
Phone: (515) 292-5000
Fax: (515) 292-5100
www.jensenbuilders.com

Casey's Service Company Hangar
Ankeny Regional Airport
Ankeny, Iowa 50021

#	DATE	DESCRIPTION
1	08-13-2024	Construction Set

PROJECT NO:	24-159
DRAWN BY:	Author
CHECKED BY:	Checker
CHECKED BY:	Approver

COPYRIGHT: ©JENSEN BUILDERS, LTD.

SHEET TITLE
Life Safety Plan

LS100

ALL IDEAS, DESIGNS, AND DRAWINGS SET FOURTH ON THIS SHEET ARE THE ORIGINAL WORK PRODUCT OWNED BY JENSEN BUILDERS , LTD. THESE DRAWINGS ARE COPYRIGHTED BY JENSEN BUILDERS, LTD AND MAY NOT BE RE-USED OR REPRINTED ELECTRONICALLY OR OTHERWISE WITHOUT THE EXPRESSED WRITTEN PERMISSION OF JENSEN BUILDERS, LTD.

Paul Moritz, P.E.
Airport Board Manager

Ankeny Regional AIRPORT
Central Iowa's Business Connection

Memorandum

TO: **Justin Strom (Snyder) and Aaron Wolfe (Casey's)**
DATE: **September 17, 2024**
RE: **Casey's Service Company Hangar Plan Comments**

Justin and Aaron: I reviewed Snyder's site plan and Jensen's Building Plans on behalf of the Polk County Aviation Authority. I made general comments on these plans and checked them against our Airport Hangar Construction Standards. Pending addressing these comments, I will recommend that the Board approve these plans at their next meeting on October 10th:

Site Plan:

Sheet C100:

- The owner is shown as the City of Ankeny. The underlying property is owned by the Polk County Aviation Authority and the hangar building will be owned by Casey's. I'm not sure which owner would be correct to list here.

Sheet C200:

- Note E – General Notes: The open cut in the access roadway should be barricaded whenever the contractor is not working.

- Note F – General Notes: There is a location at the far south end of the airport where excess material can be spoiled. It is accessible from inside the airport fence. Coordinate with myself and Exec 1 if you want to utilize this site.

- Section 3 – Construction Notes: All pavement joints on the apron and access roadway need to be standard SUDAS joints.

- Note C3 – Construction Notes: This calls for an expansion joint between the existing and proposed apron pavement. Our preference would be to have this not be an expansion joint. The building plans show an expansion joint against the hangar building which seems standard for the other buildings at the airport. We can discuss if needed.

- The limits of the open cut of the access roadway for the storm sewer installation needs to start at one of the existing transverse joints and extend to at least ½ of a panel width. If the required width is more than 1/2 of a panel, a whole panel removal is required. The access roadway has subbase under the paving. Include similar subbase material under the patch, along with full compaction of the trench per SUDAS.

- Note 4A – Construction Notes: All pavement markings at the airport are yellow, not white.

- Note 5C – Construction Notes: I believe that the electric line running next to the hangar site is a single-phase line. If the large aircraft door requires 3-phase power, the extension of a three-phase electric line to this site will need to be coordinated with MidAm and will be at the hangar owner's expense.

- Note 7A – Construction Notes: There is a roof drain collector line between the access roadway and the hangar pad. All roof downspouts need to be connected to this line (or the proposed parking lot storm sewer).

- Note 11A – Construction Notes: Extend the outlet FES for the proposed 12" storm sewer to the edge of the existing concrete flume in the ditch bottom.

- Note 13 – Construction Notes: In addition to the required temporary seeding, permanent-seed all disturbed areas with Type II lawn mix when in the proper seeding window.

Building Plans:

- Sheet S101 shows a trench drain in the middle of the hangar floor. Where will this drain outlet?

- Sheet A201 shows the maximum height of the hangar to be 35'-2". This matches the height of the nearby hangars so this should be within the height limits per the FAA.

Checking the plans against the Airport Hangar Standards:

Location: OK

Dimensions: OK

Framework: OK.

Adjacent Hangars: OK

Doors: Metal doors are specified, OK. The garage-sized door on the land side of the hangar will be recommended to the board for approval.

Flatwork: OK. It is noted that the site plan shows the paving for the canopy parking as 7" PCC while the building plans show it as 8" PCC.

Exterior Wall Materials: OK

Roofing Materials: Verify that the roof panels will be 28-gauge metal standing seam panels or similar.

Exterior Colors: The exterior of the building needs to be white with gray trim.

Signing: No building signs are shown on the plans. OK.

Parking and Access: OK

Lighting: Verify that any building lights on the airside of the hangar will be shielded/hooded from shining onto the airfield.

Landscaping: The plans do not include any landscaping improvements. OK.

Security: N/A

Site Drainage: Sheet A201 and A401 show roof downspouts at each of the building corners.
Again, all roof downspouts need to be connected to the roof drain line or the proposed storm sewer.

Utilities: No issues noted. The specific locations of the water and sanitary sewer will need to be provided by McClure. The location of the electric transformer will need to be coordinated with MidAmerican Energy.

LEE CHAMBERLIN
CONSULTANT ENGINEERS

To: **Paul Moritz PE, Airport Board Manager** **Date: 09-18-2024**
From: **Mark Lee, Lee Chamberlin Consultant Engineers**

RE: Rick's Landing Airport Hanger SUBMITTAL COMMENTS (RESPONSE)
Thank you for the review of the site plan and Hanger building elevation plans.
We have reviewed the comments dated September 13, 2024, and have prepared the following responses:

Sheet A1.1:

- A sand/oil interceptor is shown near the overhead door. I assume that this will be pumped out by the owner and will not have an outlet line. The proposed oil/sand separator will need to be pumped out from time to time when the grit reaches a certain level, however the discharge from this chamber will directly outlet to the sanitary sewer system. The minor petroleum products will be contained in the tank and any major spills will be handled separately.

Sheet C.1

- In the box to the left of the title, my phone number is incorrect, it should be (515)965-6428. Revised.
- The address is noted as 3710 SE Convenience Blvd. I assume that this is as assigned by the city planners. These numbers will need to be displayed on the building per the fire department. Address assigned previously.
- In the Utility Coordination box, Metronet is listed for communications. I was not aware that Metronet has service to the airport. Aureon previously installed a network cable along the west side of the access roadway. These hangar sites have the ability to connect to this line if so desired. Exec 1 Aviation uses Centurylink for their network needs. Revised to Aureon.

Sheet C.2

- The four aircraft tie-down "tees" on the adjacent apron pavement will no longer be utilized by Exec 1. These painted markings can be left in place or removed at the owner's discretion. The pavement markings will be removed. Note provided on plans.

Sheet C.3

- The configuration of the four parking stalls and driveway on the north side of the hangar were provided from the previous site plan drawings. It is recommended that you check to ensure that the turning movements into these stalls for a passenger car are acceptable. We have reconfigured the parking and added parking at the access road side with sidewalk tying all together.
- The pavement markings are called out as 4" wide white stripes. I need to verify if we will want white or yellow stripes to match the other markings at the airport. Revised to yellow.
- There are four proposed concrete connections to the existing access roadway. The connections need to be detailed and completed in accordance with SUDAS standards including full-depth saw cuts, connection joint details, etc. A R-T joint is planned for the connection to the existing edge of pavement with no full depth saw cut. The contraction jointing in the access pavement will match the existing access road pavement. The building side joint will be an expansion joint.
- The existing cleanouts in the parking stall and the apron paving will need to be adjusted to the finished grade of the proposed paving. A note was added to adjust cleanouts.
- There are four walk-=out doors shown on the west side of the hangar. The south door will have a concrete slab in front of it, but the other three do not appear to have a concrete stoop/landing provided. These are not required, just noted. All doors now have pavement outside the building.

10430 New York Ave, Ste C • Urbandale, IA 50322-3773
Office (515) 252-7457 • Cell (515) 669-4188
www.leechamberlinengineers.com

Checking the plans against the Airport Hangar Standards:
Location: OK
Dimensions: OK
Hangar Height: The 35-foot maximum height matches the adjacent existing hangars. OK

Framework: The plans as submitted do not specify the structural members. Please verify. The proposed building has not been fully designed but will be a steel framed structure.

Adjacent Hangars: OK

Doors: The large bi-fold door materials are not called out, but it is assumed that they will be standard metal doors. The garage-sized door on the land side of the hangar will be recommended to the board for approval. The bi-fold door will be steel framed and metal skin. The land side door will be metal framed with a metal skin.

Flatwork: The existing apron paving is 7" of non-reinforced PCC over 6" of modified subbase (Iowa DOT 4123). The apron paving in front of the hangar should match this paving. Note revised to match.

Will the parking areas be 6" of reinforced pavement per the detail on Sheet C.4? Note revised to 7" non-reinforced.

Exterior Wall Materials: OK

Roofing Materials: The roof is labeled as white metal panels on Sheet A1.2. Verify that these panels will be 28-gauge standing seam panels or similar. Note added.

Exterior Colors: OK per callouts on Sheet A1.2.

Signing: No building signs are shown on the plans. OK.

Parking and Access: The configuration of the parking on the north side of the hangar is similar to what was proposed previously. Consider verification of this layout by turning templates so that a passenger car can maneuver into these stalls. Revised parking on the north side and added parking along access road.

Lighting: Verify that the four lights on the airside of the hangar will be shielded/hooded from shining onto the airfield. The building lights will be wall packs sharp cut off style.

Landscaping: The plans do not include any landscaping improvements. OK.

Security: N/A

Site Drainage: On Sheet C.3, a roof downspout on the south side of the hangar is called out as being connected to the existing roof drain line. All roof downspouts need to be connected to the roof drain line. All roof drains on the west side will be connected to the roof drain line.

Utilities: No issues noted. Open cutting of the access roadway to install the utility services is not allowed. OK

If you have any questions, please contact us at (515) 252-7457.

Mark Lee
Lee Chamberlin Consultant Engineers
10430 New York Avenue, Suite C
Urbandale, IA 50322-3773 Office: (515) 252-7457

RICK'S LANDING, L.L.C.

SITE PLAN

CITY OF ANKENY

POLK COUNTY, IOWA

PROJECT NO. 22032

City of Ankeny Standard Notes for Site Plans:

1. General Notes:

   a. All work shall be done in accordance with the 2024 edition of the Iowa Statewide Urban Design and Specifications (SUDAS) for Public Improvements on the date of approval and the City of Ankeny Suplemental Specifications.
   b. All permits (IDNR, NPDES, IDOT, Army Corp., etc.) shall be obtained prior to the start of construction.
   c. Provide the City of Ankeny with record drawings (as-builts) of all improvements and easements as per City commercial as-built policy.
   d. A Knox box is required by the fire department.
   e. All site lighting shall not spill onto adjacent properties or rights-of-way.
   f. The contractor shall be responsible for locating all newly constructed public and private utilities associated with the project at their expense.

2. Water Main Notes:

   a. All valves shall be resilient wedge gate valves.
   b. Water service shall be 1-inch minimum type K copper. A sprinkler service shall be 6-inch dia. PVC(C900) with a back flow preventor system approved by the City of Ankeny.
   c. New water main shall be pressure tested and chlorinated by the contractor. The bacteria test and submittal of test to lab shall be done by the contractor and results provided to the City of Ankeny Engineering Division. All tests and sampling to be witnessed by the City Engineering Division. If the test does not pass, the contractor will be required to pay for all the water used to repeat the test.
   d. New water main shall be pressure tested and chlorinated by the contractor. The bacteria test and submittal of test to lab shall be done by the contractor and results provided to the City of Ankeny Engineering Division. All tests and sampling to be witnessed by the City Engineering Division. If the test does not pass the contractor will be required to pay for all the water used to repeat the test. Pressure & leak testing is submitted on Form ANK 5030.3.05.M City Water staff provide sample bottle and paperwork for bacteria sampling. Contractor delivers to DMWW.

NOTES:

1. Utility warning:
   The utilities shown have been located from field survey information and / or Records obtained. The surveyor makes no guarantee that the utilities shown Comprise all such utilities in the area, either in service or abandoned. The surveyor further does not warrant that the utilities shown are in the Exact location indicated. Verify location of all utilites before construction.
2. Length of utilities shown on plans are dimensioned from center of structure To center of structure for sanitary and inside wall to inside wall for storm sewer.
3. All traffic control shall be provided in accordance with requirements Set forth in the manual on uniform traffic control devices (mutcd) When construction activities obstruct portions of the roadway, flaggers Shall be provided. Flaggers shall conform to the mutcd in appearance, Equipment and method.
4. Notify engineer and City of Ankeny at least 48 hours prior to beginning work.
5. Backfill with suitable material and compact to 95% minimum density per sudas.
6. Adjustment of existing utility appurtenances to final grade is considered incidental to the site work.
7. Dimensions, building location, utilities and grading of this site are based on information available at the time of Layout. Deviations may be necessary in the field, any such changes or conflicts between this plan and held Conditions are to be reported to the architect/engineer prior to starting construction.
8. The site contractor shall be responsible for verification of all dimensions prior to starting work.
9. The existing cleanouts in the parking stall and the apron paving will need to be adjusted to the finished grade of the proposed paving.

LEGAL DESCRIPTION (BOOK 7041 PAGE 836):

PART OF THE NE¼ AND PART OF THE SE¼ OF SECTION 31, TOWNSHIP 80 NORTH, RANGE 23 WEST OF THE 5TH P.M., POLK COUNTY, IOWA, MORE PARTICULARLY DESCRIBED AS FOLLOWS:

BEGINNING AT A 5/8 INCH IRON ROD FOUND FOR THE CENTER OF SAID SECTION 31; THENCE N00°24'44"E, ALONG THE WEST LINE OF SAID NE¼ FOR 1319.46 FEET TO A 5/8 INCH IRON ROD SET FOR THE NORTHWEST CORNER OF THE SW¼ NE¼ SAID SECTION 31; THENCE S89°57'01"E, ALONG THE NORTH LINE OF SAID SW¼ NE¼ AND SE¼ NE¼ FOR 2577.34 FEET TO A 5/8 INCH ROD SET; THENCE S89°57'01"E, ALONG SAID NORTH LINE FOR 60.00 FEET TO THE NORTHEAST CORNER OF THE SE¼ NE ¼; THENCE S00°20'54"W, ALONG THE EAST LINE OF SAID NE¼ FOR 1319.51 FEET TO A 5/8 INCH ROD FOUND FOR THE SOUTHEAST CORNER OF SAID NE¼, THENCE S00°38'14"W, ALONG THE EAST LINE OF SAID SE¼ FOR 521.21 FEET' THENCE N89 °55'48"W, PARALLEL WITH THE SOUTH LINE OF THE NW¼ SE¼ AND NE¼ SE¼ OF SAID SECTION 31 FOR 60.00 FEET TO A 5/8 INCH IRON ROD SET; THENCE N89°55'48"W, PARALLEL WITH SAID SOUTH LINE FOR 753.52 FEET TO A 5/8 INCH IRON ROD SET; THENCE S00°00'00"E, FOR 800.00 FEET TO A 5/8 INCH IRON ROD SET IN THE SOUTH LINE OF SAID NW¼ SE¼; THENCE N89°55'58W, ALONG SAID SOUTH LINE FOR 1829.41 FEET TO A 5/8 INCH IRON ROD FOUND FOR THE SOUTHWEST CORNER OF SAID NW¼ SE¼, THENCE N00°25'49"E, ALONG THE WEST LINE OF SAID SE¼ FOR 1320.42 FEET TO THE POINT OF BEGINNING, CONTAINING 144.989 ACRES (6,315,707 SQUARE FEET) OF LAND; SUBJECT TO 2.535 ACRES (110,438 SQUARE FEET) OF LAND FOR ROADWAY PURPOSES, WITH ALL THE SECTION LINES RELATIVE TO TRUE NORTH.

PROJECT BENCHMARK:		
	WGS 84 DATUM- GE01D 18	
	IOWA STATE PLANE SOUTH	
BM-1	FIRE HYDRANT - ARROW ELEV. = 897.52	
9-9-24	REV 2- CITY OF ANKENY 2ND COMMENT LETTER	JP
9-13-24	REV - AIRPORT BOARD	JP
DATE	REVISION	BY

OWNER:
POLK COUNTY AVIATION AUTHORITY
410 W. 1ST STREET
ANKENY, IA 50023-1557
DEVELOPER (LEASE):
RICK'S LANDING, L.L.C.
KARIE KADING RAMSEY
7008 MADISON AVE
URBANDALE, IOWA 50322
(515) 229-2740
OWNER'S CONTACT:
PAUL MORITZ
410 W. 1ST STREET
ANKENY, IA 50023-1557
Tele: (515) 965-6428
ENGINEER/SURVEYOR:
MARK L. LEE
LEE CHAMBERLIN
CONSULTANT ENGINEERS
10430 NEW YORK AVE, STE C
URBANDALE, IA 50322-3773
Tele: (515) 669-4188
HANGER SITE ADDRESS:
ANKENY REGIONAL AIRPORT
3710 SE CONVENIENCE BLVD.
ANKENY, IA 50021

INDEX OF PAGES

PAGE NO.	DESCRIPTION
C.1.	COVER SHEET
C.2.	TOPOGRAPHIC SURVEY
C.3.	SITE PLAN
C.4.	DETAILS

Utility Coordination

The Contractor is responsible to coordinate construction with the following utilities known to have services in the area:

Electric: MidAmerican Energy

Water & Sewer: City of Ankeny

Natural Gas: MidAmerican Energy or Black Hills Energy

Communications: Aureon

Refuse: Ankeny Sanitation

GENERAL NOTES:

1. ALL PUBLIC IMPROVEMENTS CONSTRUCTION MUST CONFORM TO THE CONSTRUCTION REQUIREMENTS OF THE CURRENT VERSION OF SUDAS (2024) AND THE CITY OF ANKENY SUPPLEMENTAL SPECIFICATIONS. THE CITY OF ANKENY IS RESPONSIBLE FOR PROVIDING CONSTRUCTION INSPECTION OF ALL PUBLIC IMPROVEMENTS.

2. ALL UTILITY CONTRACTORS/OWNERS SHALL BE RESPONSIBLE TO PROVIDE LEE CHAMBERLIN CONSULTANT ENGINEERS WITH "AS BUILT" DRAWINGS SHOWING THE LOCATION OF PUBLIC FACILITIES AS CONSTRUCTED. LEE CHAMBERLIN CONSULTANT ENGINEERS SHALL PROVIDE TO THE CITY OF ANKENY CERTIFIED "AS BUILT"DRAWINGS, INCLUDING DETENTION BASINS VERIFYING STORAGE REQUIRMENTSARE PER PLAN.

3. ALL AREAS WITHIN THE RIGHT-OF-WAY DISTURBED BY CONSTRUCTION SHALL BE SEEDED, FERTILIZED AND MULCHED IN ACCORDANCE WITH SUDAS AND THE CITY OF ANKENY STANDARD SPECIFICATIONS. IF CONSTRUCTION CANNOT BE COMPLETED BEFORE THE END OF THE NORMAL SEEDING PERIOD, TEMPORARY SEEDING WILL BE REQUIRED IN THE INTERIM.

4. IT SHALL BE THE DEVELOPER'S RESPONSIBILITY TO APPLY FOR AND OBTAIN ANY STORM WATER DISCHARGE PERMITS FROM THE IOWA DEPARTMENT OF NATURAL RESOURCES IF SAID PERMITS ARE REQUIRED AS A PART OF THIS PROJECT.

5. ANY FIELD TILES ENCOUNTERED DURING EXCAVATION SHALL BE TIED INTO THE PROPOSED PAVEMENT SUBDRAIN SYSTEM OR THE PROPOSED STORM SEWER SYSTEM.

6. THE POST DEVELOPMENT RUN-OFF WILL NOT ADVERSELY AFFECT THE DOWNSTREAM DRAINAGE FACILITIES OR PROPERTY OWNERS.

7. ANY SUBSURFACE DRAINAGE FACILITIES THAT ARE DISTURBED DURING THE CONSTRUCTION SHALL BE RESTORED OR REROUTED BY THE PROPERTY OWNER/CONTRACTOR.

8. ALL SIDEWALKS SHALL BE 5' WIDE. SIDEWALK ADA RAMPS SHALL BE INSTALLED WHERE NECESSARY.

9. A GEOTECHNICAL REPORTS SHALL BE THE RESPONSIBILITY OF THE CONTRACTOR.

10. THE DEVELOPER IS RESPONSIBLE FOR MAINTENANCE OF DRAINAGE SWALES LOCATED IN OVERLAND FLOWAGE AREAS.

11. ALL CRITICAL CROSSINGS OF THE WATERMAIN AND SEWER (SANITARY AND STORM) MUST FOLLOW THE REQUIREMENTS OF THE CURRENT VERSION OF SUDAS (2024), DIVISION 5- WATERMAINS AND APPURTENANCES, 3.06 CONFLICTS (2024)

12. BUILDING PLANS AND STRUCTURAL REPORTS WILL BE SUBMITTED SEPARATELY.

13. REFUSE CONTAINERS SHALL BE LOCATED INSIDE.

IOWA ONE CALL
1-800-292-8989
www.iowaonecall.com
811 Know what's below. Call before you dig.

ZONING CLASSIFICATION:

U-1 CONSERVATION AND PUBLIC UTILITY DISTRICT

ESTIMATED CONSTRUCTION SCHEDULE

PROPOSED USE:
WAREHOUSE - AIRCRAFT HANGAR

BUILDING:
82'x217' STEEL FRAME

FLOOR AREA-
HANGAR = 15,334 SF
DAYROOM = 2,460 SF
TOTAL = 17,794 SF

PARKING:
REQUIRED: 6
PROPOSED: 7 W/ 1 H.C.

EQUIVALENT RESIDENTIAL UNITS(ERU):
Total Impervius Area = 25,500 SF
ERU=25,500/4000=6.38
PROPOSED = 7 ERU

LEGEND

SECTION CORNER FOUND	DECIDUOUS TREE (EXISTING)
SECTION CORNER SET	DECIDUOUS TREE (REQUIRED)
PROPERTY PIN FOUND	CONIFERUOUS TREE (EXISTING)
PROPERTY PIN SET	CONIFERUOUS TREE (REQUIRED)
GPS MONUMENT	SHRUB (EXISTING)
BENCHMARK	SHRUB (REQUIRED)
MONUMENT	TREE REMOVAL REQUIRED
SOIL BORING	STUMP
TEST WELL	PROPOSED PAVEMENT ELEVATION
MONITORING WELL	GRADE FLOW ARROW
SANITARY SEWER MANHOLE	PIPE FLOW ARROW
SANITARY CLEANOUT	EXISTING CONTOURS
SEPTIC TANK	PROPOSED CONTOURS
CISTERN	PROPERTY LINE
LIFT STATION	CENTERLINE OF ROADWAY
STORM SEWER MANHOLE	RIGHT-OF-WAY
CURB INTAKE	FENCE LINE
BEEHIVE INTAKE	CONSTRUCTION LIMITS
CATCH BASIN	SANITARY SEWER LINE
FLARED END SECTION	STORM SEWER LINE
CULVERT	STORM CULVERT PIPE
WATER MANHOLE	REINFORCED CONCRETE PIPE
FIRE HYDRANT	DUCTILE IRON PIPE
YARD HYDRANT	WATER LINE
WATER VALVE	OVERHEAD ELECTRIC LINE
POST INDICATOR VALVE	UNDERGROUND ELECTRIC LINE
VALVE PIT	UNDERGROUND TELEPHONE LINE
WATER METER	FIBER OPTICS LINE
PUMP	HIGH PRESSURE GAS LINE
METER STATION	LOW PRESSURE GAS LINE
PUMP STATION	STEEL LUMINAIRE
WATER TANK	WOOD LUMINAIRE
WELL	SIGN
ELECTRIC MANHOLE	MAILBOX
ELECTRIC BOX	BIN
TRANSFORMER PAD	PROPANE TANK
GUY	
FIBER OPTICS MANHOLE	
TELEPHONE MANHOLE	
TELEPHONE PEDESTAL	
TELEPHONE BOOTH	
UNKNOWN MANHOLE	
UTILITY POLE	

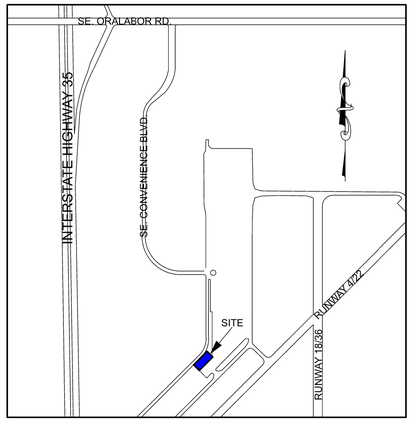

VICINITY SKETCH
1:500'

PROFESSIONAL ENGINEER & LAND SURVEYOR
LICENSED
MARK LINDSAY LEE
11582
IOWA

I hereby certify that this engineering document was prepared by me or under my direct personal supervision and that I am a duly licensed Professional Engineer under the laws of the State of Iowa.

Signature: Date:

Name: (Printed or typed) MARK L. LEE
License Number 11582
My license renewal date is December 31, 2024.
Pages or sheets covered by this seal: ENTIRE SET

DESIGN START DATE: 08-02-2023
DATE PLOTTED: 07-19-2024
PRELIMINARY FIELD WORK COMPLETED: 07-18-2024
FIELD BOOK NO. 2024-01

RICK'S LANDING, L.L.C.
SITE PLAN
ANKENY, POLK COUNTY, IOWA

LEE CHAMBERLIN CONSULTANT ENGINEERS
10430 New York Ave, Ste C
Urbandale, IA 50322-3773
Phone: (515)252-7457
Email:
mlee@leechamberlinengineers.com
Website:
www.leechamberlinengineers.com

DRAWING TITLE:
COVER SHEET

DRAWN BY: RWT
CHECKED BY: JGP
DATE: 09/19/2024
JOB NO. 22032
SHEET C.1

NOTE #1: AS-BUILT INFORMATION SHALL BE PROVIDED TO DevEngineering@Ankenyiowa.gov BEFORE THE FULL CERTIFICATE OF OCCUPANCY CAN BE ISSUED.

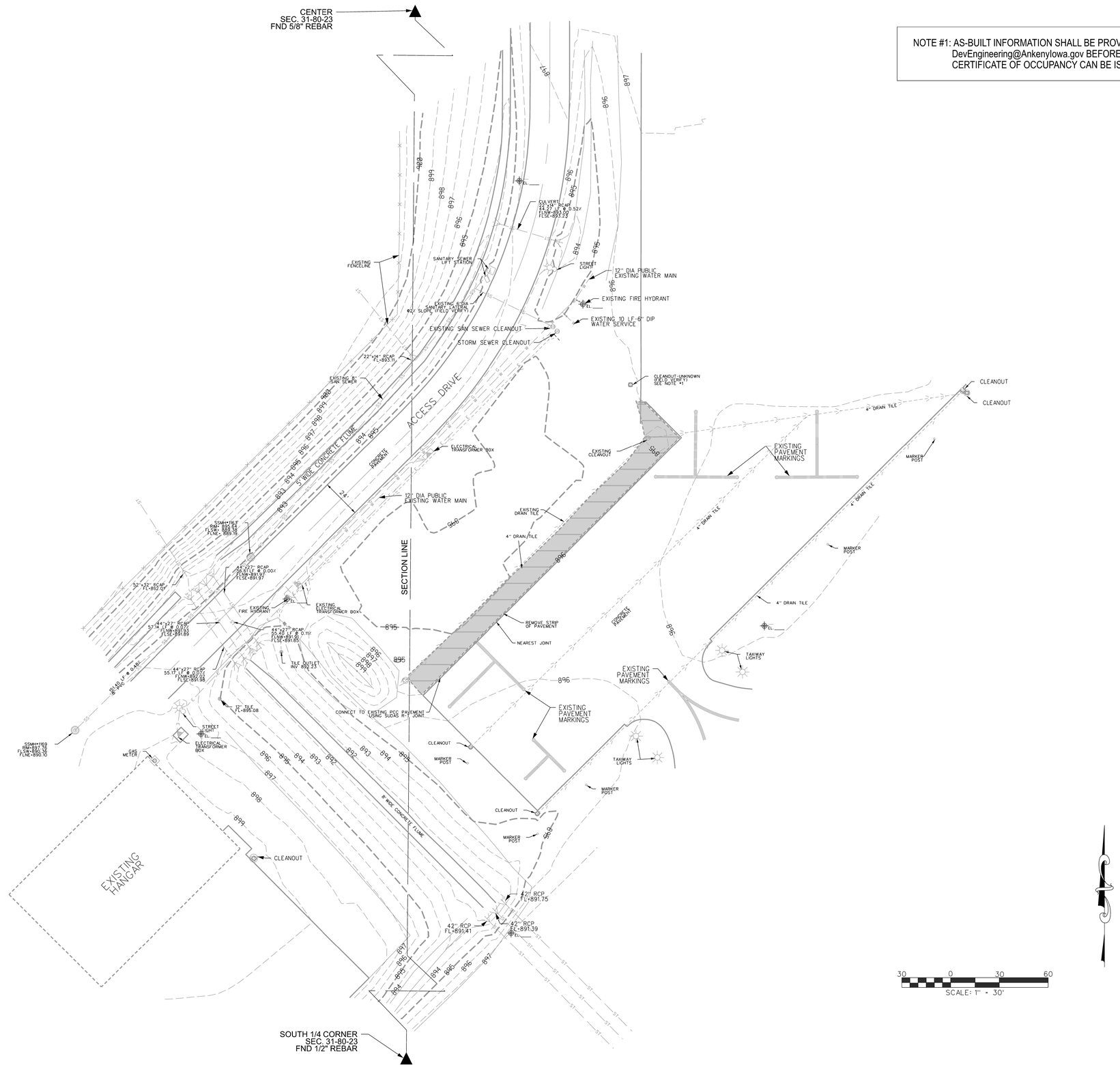

DESIGN START DATE: 08-02-2023

DATE PLOTTED: 07-19-2024

PRELIMINARY FIELD WORK COMPLETED: 07-18-2024

FIELD BOOK NO. 2024-01

RICK'S LANDING, L.L.C.
SITE PLAN
ANKENY, POLK COUNTY, IOWA

LEE CHAMBERLIN
CONSULTANT ENGINEERS
10430 New York Ave, Ste C
Urbandale, IA 50322-3773
Phone: (515)252-7457
Email:
mlee@leechamberlinengineers.com
Website:
www.leechamberlinengineers.com

DRAWING TITLE:

TOPOGRAPHIC SURVEY

DRAWN BY: RWT

CHECKED BY: JGP

DATE: 09/19/2024

JOB NO. 22032

SHEET C.2

NOTE #1: AS-BUILT INFORMATION SHALL BE PROVIDED TO DevEngineering@Ankenylowa.gov BEFORE THE FULL CERTIFICATE OF OCCUPANCY CAN BE ISSUED.

- ALL DOWNSPOUTS SHOULD BE CONNECTED TO ROOF DRAIN LINE
- 7" OF NON-REINFORCED PCC OVER 6" MODIFIED SUBASE
- CUT OFF LIGHT
  MLG-LED-WPFC-ADJUSTABLE WALL
  30 WATT FULL CUTOFF LED WALPACK/4000 LUMENS
- CONNECTION TO EXISTING PCC PAVEMENT WITH RT JOINTS SEE SHEET C.4 FOR DETAILS

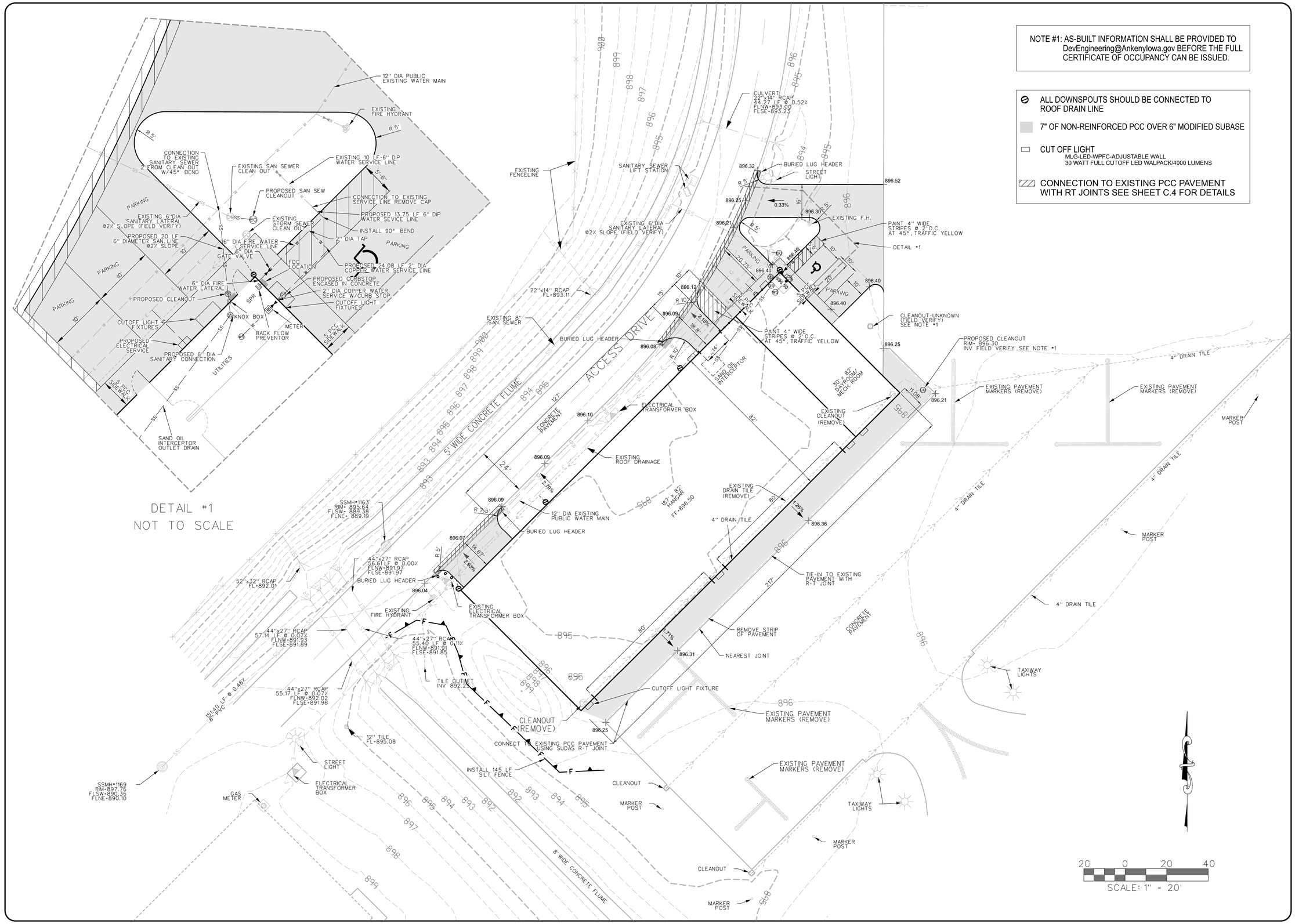

DESIGN START DATE:	08-02-2023
DATE PLOTTED:	07-19-2024
PRELIMINARY FIELD WORK COMPLETED:	07-18-2024
FIELD BOOK NO.	2024-01

RICK'S LANDING, L.L.C.
SITE PLAN
ANKENY, POLK COUNTY, IOWA

LEE CHAMBERLIN CONSULTANT ENGINEERS
10430 New York Ave, Ste C
Urbandale, IA 50322-3773
Phone: (515)252-7457
Email:
mlee@leechamberlinengineers.com
Website:
www.leechamberlinengineers.com

DRAWING TITLE:
SITE PLAN

DRAWN BY:	RWT
CHECKED BY:	JGP
DATE:	09/19/2024
JOB NO.	22032
SHEET	C.3

DIVISION 9

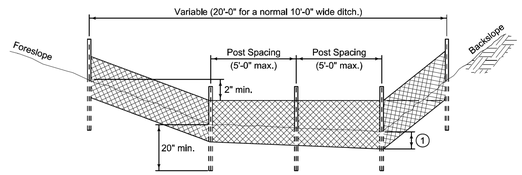

TYPICAL SILT FENCE DITCH CHECK

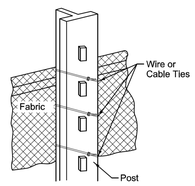

ATTACHMENT TO POST

1 Insert 12 inches of fabric a minimum of 6 inches deep (fabric may be folded below the ground line).

Posts shall be placed on downstream side of the flow direction.

SUDAS

REVISION 2 10-21-14

9040.119

SHEET 1 of 2

SUDAS Standard Specifications

SILT FENCE

MODIFIED

NOTE: RED TEXT AND SYMBOLS DENOTE MODIFICATIONS

9-18

FIGURE 9040.119 SHEET 1 OF 2

SITE WORK AND LANDSCAPING

DIVISION 9

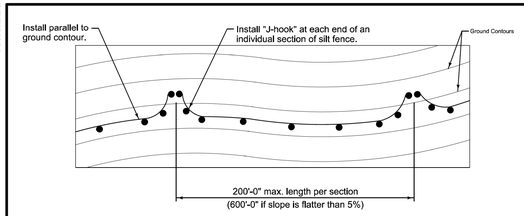

TYPICAL SILT FENCE INSTALLATION ON LONGITUDINAL SLOPES
(Plan View)

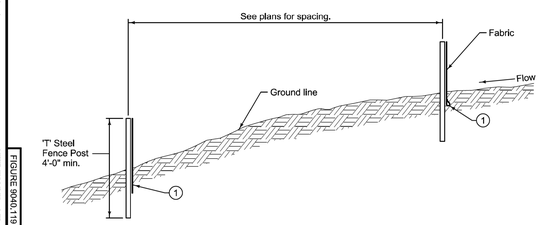

TYPICAL SILT FENCE INSTALLATION ON LONGITUDINAL SLOPES
(Profile View)

1 Insert 12 inches of fabric a minimum of 6 inches deep (fabric may be folded below the ground line).

2 Reduce post spacing to 5'-0" at water concentration areas, or as required to adequately support fence.

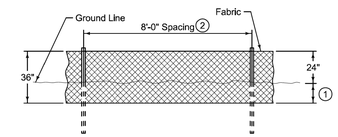

DETAILS OF SILT FENCE ON LONGITUDINAL SLOPES

SUDAS

REVISION 2 10-21-14

9040.119

SHEET 2 of 2

SUDAS Standard Specifications

SILT FENCE

NO CHANGES

NOTE: NO CHANGES TO SHEET 2/2

9-19

FIGURE 9040.119 SHEET 2 OF 2

SITE WORK AND LANDSCAPING

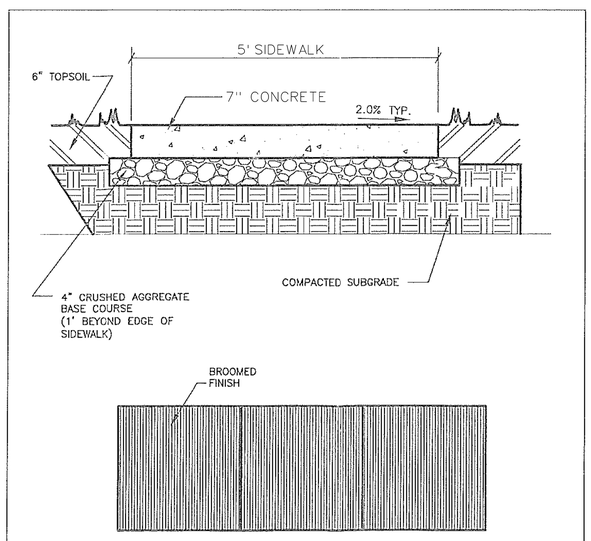

6 C102 TYPICAL SIDEWALK SECTION
NTS

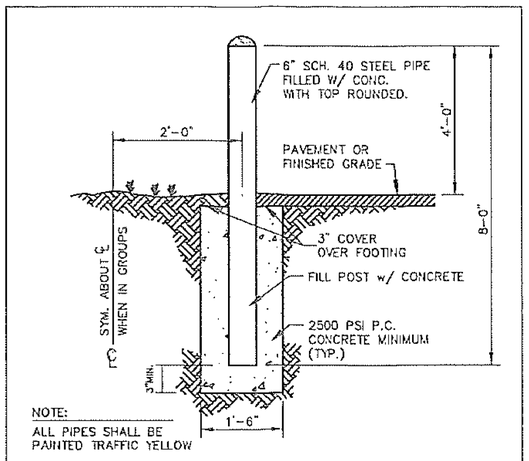

NOTE:
ALL PIPES SHALL BE
PAINTED TRAFFIC YELLOW

3 C102 BOLLARD DETAIL
NTS

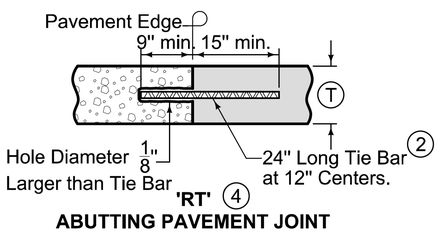

ABUTTING PAVEMENT JOINT
RIGID TIE

LEGEND
Existing Pavement
Proposed Pavement

SUDAS | IOWA DOT

REVISION 11 04-19-22

PV-101

SHEET 1 of 8

FIGURE 7010.101 | STANDARD ROAD PLAN

REVISIONS: Modified circle note 32.

SUDAS DIRECTOR | DESIGN METHODS ENGINEER

JOINTS

DESIGN START DATE: 08-02-2023

DATE PLOTTED: 07-19-2024

PRELIMINARY FIELD WORK COMPLETED: 07-18-2024

FIELD BOOK NO. 2024-01

RICK'S LANDING, L.L.C.
SITE PLAN
ANKENY, POLK COUNTY, IOWA

LEE CHAMBERLIN
CONSULTANT ENGINEERS
10430 New York Ave, Ste C
Urbandale, IA 50322-3773
Phone: (515)252-7457
Email:
mlee@leechamberlinengineers.com
Website:
www.leechamberlinengineers.com

DRAWING TITLE:
DETAILS

DRAWN BY: RWT
CHECKED BY: JGP
DATE: 09/19/2024
JOB NO. 22032
SHEET C.4

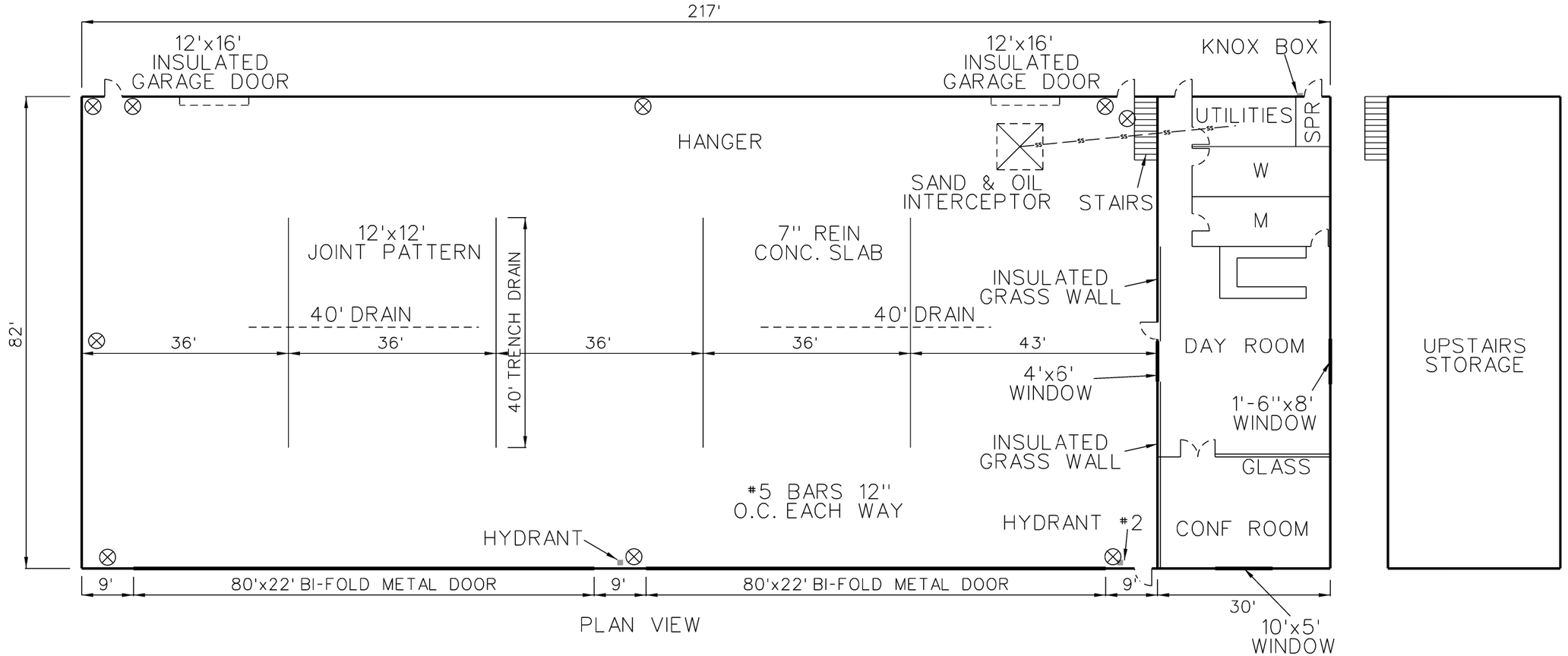

PLAN VIEW

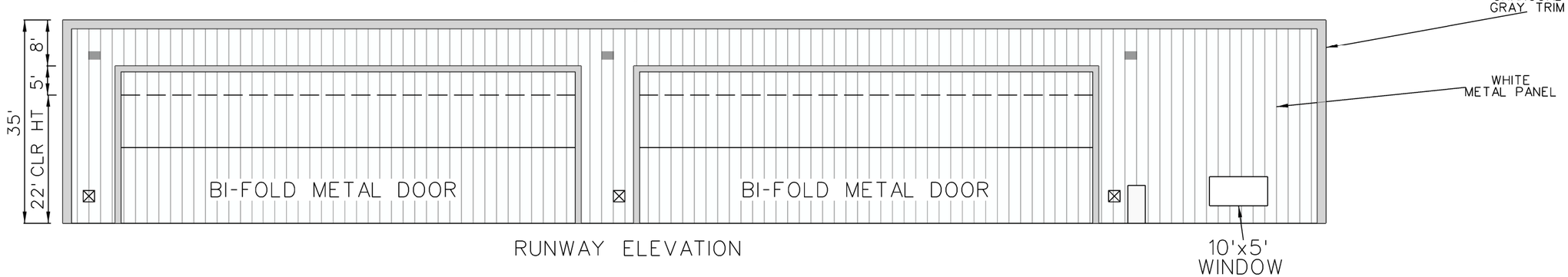

RUNWAY ELEVATION

NOTE 1: 7" REINF. CONC. SLAB W/ #5 BARS @ 12" O.C. EACH WAY

NOTE 2: SLAB JOINTS @ 12' O.C. EACH WAY

⊗ INTERIOR OUTLET
⊠ EXTERIOR OUTLET
▪ EXTERIOR LIGHT
MLLG-LED-WPFC-Adjustable Wall
30 Watt Full Cutoff LED Wall Pack/4000 Lumens

NOTE

1. BUILDING SHALL BE A STEEL FRAME STRUCTURE

20 0 20 40

SCALE: 1" = 20'

DESIGN START DATE: 08-02-2023
DATE PLOTTED: 07-18-2024
PRELIMINARY FIELD WORK COMPLETED: 07-18-2024
FIELD BOOK NO. 2024-01

RICK'S LANDING
HANGER BUILDING
ANKENY, POLK COUNTY, IOWA

LEE CHAMBERLIN
CONSULTANT ENGINEERS
10430 New York Ave, Ste C
Urbandale, IA 50322-3773
Phone: (515)252-7457
Email:
mlee@leechamberlinengineers.com
Website:
www.leechamberlinengineers.com

DRAWING TITLE:
FLOOR PLAN

DRAWN BY: NJB
CHECKED BY: JGP
DATE: 09/19/2024
JOB NO. 22032
SHEET A1.1

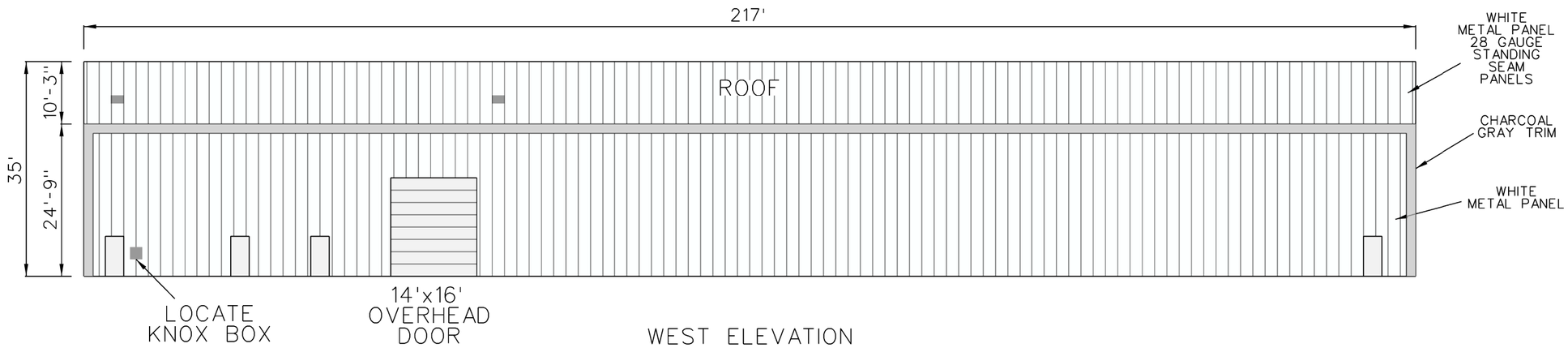

WEST ELEVATION

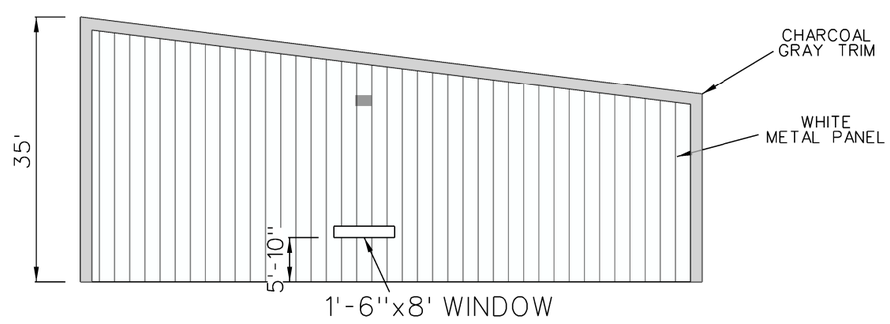

NORTH ELEVATION

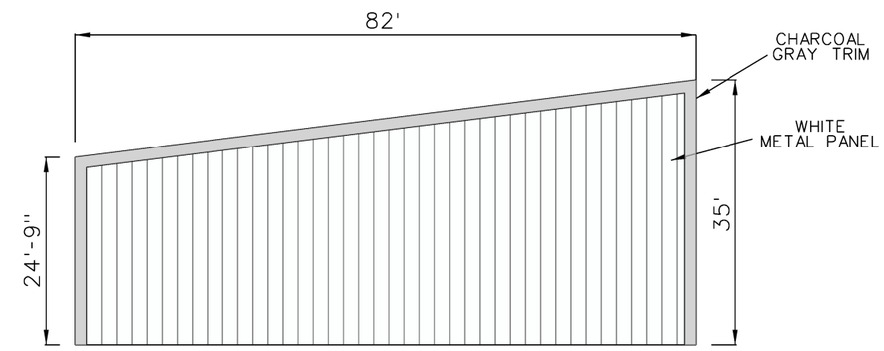

SOUTH ELEVATION

SCALE: 1" = 20'

EXTERIOR LIGHT
MLLG-LED-WPFC-Adjustable Wall
30 Watt Full Cutoff LED Wall Pack/4000 Lumens

DESIGN START DATE: 08-02-2023
DATE PLOTTED: 07-18-2024
PRELIMINARY FIELD WORK COMPLETED: 07-18-2024
FIELD BOOK NO. 2024-01

RICK'S LANDING
HANGER BUILDING
ANKENY, POLK COUNTY, IOWA

LEE CHAMBERLIN
CONSULTANT ENGINEERS
10430 New York Ave, Ste C
Urbandale, IA 50322-3773
Phone: (515)252-7457
Email:
mlee@leechamberlinengineers.com
Website:
www.leechamberlinengineers.com

DRAWING TITLE:
ELEVATION VIEW

DRAWN BY: NJB
CHECKED BY: JGP
DATE: 09/19/2024
JOB NO. 22032
SHEET A1.2

Coverages & Carrier	2023/24 Renewal	2024/25 Renewal	Difference
Property	$ 38,204	$ 51,202	$ 12,998
Blanket Building Limit - 90%	5,797,078	7,378,669	1,581,591
Personal Property Limit	112,157	123,484	11,327
Airport Towers & Antennas	171,275	183,435	12,160
Water Treatment Equipment in the Open	34,255	36,687	2,432
Fencing	1,177,985	1,261,621	83,636
Business Income-Included in Enhancement FA258	100,000	100,000	0
Deductible	5,000	5,000	
Wind/Hail Deductible Per Building	2%	2%	
Rate	0.52	0.56	0
Electronic Data Processing	$ 250	$ 250	
Data Processing Equipment	10,000	10,000	
Business Income	10,000	10,000	
Deductible	500	500	
Mechanical Breakdown Deductible	1,000	1,000	
Boiler / Equipment Breakdown	$ 1,288	$ 1,288	
Network Systems Coverage	6,000,000	6,000,000	
Deductible	1,000	1,000	
Airport Liability	$ 8,325	$ 8,325	
Each Occurrence	10,000,000	10,000,000	
Deductible	Nil	Nil	
Terrorism and War Coverage	Included	Included	
Public Officials Liability	$ 1,500	$ 3,396	$ 1,896
Each Wrongful Public Officials Act	1,000,000	1,000,000	
Employment Practices Liability	N/A	1,000,000	
Annual Aggregate	1,000,000	1,000,000	
Deductible	2,500	10,000	
EPLI Deductible	N/A	10,000	
TOTAL ACCOUNT PREMIUM	$ 49,567	$ 64,461	$ 14,894

McCLURE™
making lives better

FINAL INSPECTION ATTENDANCE SHEET

DATE **9/25/24** TIME **9:00 AM** MEC PROJECT **2022001042-005**

PROJECT **Ankeny Regional Airport**
Taxiway D Apron and Access Roadway Paving – Phase 4

LOCATION **Ankeny Regional Airport**

PURPOSE **Project Walk Through**

Jay Pudenz	McClure	515-964-1229	jpudenz@mcclurevision.com
Dave Joens	McClure	515-964-1229	djoens@mcclurevision.com
Collin Christensen	CTI	515-721-7785	cchristensen@cti-ia.com
Paul Moritz	Polk County Aviation Authority	641-799-5654	PMoritz@Ankenylowa.gov

MINUTES OF FINAL INSPECTION

DATE **9/25/24** TIME **9:00 AM** MEC PROJECT **2022001042-005**

PROJECT **Ankeny Regional Airport**
Taxiway D Apron and Access Roadway Paving – Phase 4

LOCATION **Ankeny Regional Airport**

PURPOSE **Project Walk Through**

1. Closeout Requirements by Concrete Technologies, Inc (CTI)

a. Guarantee of Maintenance for period of four (4) years, per NOTICE OF PUBLIC HEARING AND LETTING, pg. 3

b. Complete final cleanup (airside surfaces free of FOD) **– See Punch List**

c. Complete final punch list items (attached)

- Completed items must be Approved by Engineer/Owner

d. Manufacturer's certifications? (street light and edge lights) **– CTI to check with Van Maanen on lighting certifications**

e. Operation and Maintenance Manuals? (street light and edge lights)) **– CTI to check with Van Maanen on lighting manuals**

2. Required Paperwork to be Submitted by McClure to Polk County Aviation Authority

a. As-built/record drawings **– McClure to provide. Survey will be completed shortly to show sanitary stub locations and other as-built information.**

b. Statement of Final Acceptance **– Forthcoming by McClure**

3. Final Change Order and Pay Estimate

Both to be compiled by McClure and submitted for future meeting agenda.
Pay estimate will include payment on all completed line items.

4. Site Inspection ***(See attached punch list for additional detail)***

Item	Satisfactory? Yes	Satisfactory? No
A. ***Access/Traffic Control***		
1. Project site neatly cleaned up – ***See Punch List***	☐	☒
2. No damage on existing airport property (pavement, buildings, etc.)	☒	☐
3. No damage to existing access roads	☒	☐
4. All equipment removed	☒	☐
5. Gate key locks/access returned - ***N/A***	☐	☐
6. Staging Area returned to existing condition	☒	☐
7. Access roads removed (if any) **– *N/A***	☐	☐
B. ***Grading***		
1. Properly compacted ***– See Punch List***	☐	☒
2. Graded for positive drainage	☒	☐
3. Erosion control devices installed and/or removed ***– See Punch List***	☐	☒
C. ***Paving***		
1. Joints properly sealed ***– See Punch List***	☐	☒
2. No visible pavement surface distresses. No visible ponding areas; drains water	☒	☐
D. ***Mulching***		
1. Hydromulching installed	☒	☐
E. ***Sanitary***		
1. Service lines installed	☒	☐
F. ***Drainage***		
1. Stormwater pipes installed	☒	☐
2. Flared end sections installed	☒	☐
3. Underdrain cleanout structures	☒	☐
4. Cleanout lids bolted down	☒	☐
5. Roof drain collector installed	☒	☐
G. ***Electrical***		
1. Street Light placement	☒	☐
2. MITLs installed in L-857 cans along Phase 4 access pavements to Taxiway D	☒	☐

5. Test Results

- Compaction Testing **– Satisfactory**
- PCC Testing **– Satisfactory**

Compaction tests and PCC tests have been provided to the Engineer.

6. Misc.

a. SWPPP PREPARATION (refer to Section 9040, 1.08-A)

a. Iowa DNR NPDES General Provision No. 2 filed

b. Notice of Discontinuation filed? **After vegetation is established**

7. Punch-list items/issues – ***See attached***

PROJECT OUTSTANDING PUNCH LIST

Project:	Ankeny Regional Airport Taxiway D Apron and Access Roadway Paving – Phase 4	Project #:	2022001042-005
Contractor:	CTI	Date Generated:	9/25/2024
Owner:	PCAA	Date of Last Update:	9/25/2024
Engineer:	McClure		

Status Legend
C - Item Complete, Approved by Engineer
V - Item Stated Complete, Engineer to Verify
NF - Item Not Finished or In Progress
? - Question / Not Sure if a Punch List Item

McCLURE™ making lives better

ITEM #	DATE ADDED	ADDED BY	DESCRIPTION	STATUS	COMMENTS	DATE APPROVED	APPROVED BY
1	09/25/24	McClure	Barricades and closure markings to be removed	NF	PLS has been contacted		
2	09/25/24	McClure	Paved service road to be sweeped (covered with granular)	NF			
3	09/25/24	McClure	Spoil pile near northwest corner of apron to be removed	NF	See Photo		
4	09/25/24	McClure	Pick up large rock and steel posts (east side of apron)	NF	See Photo		
5	09/25/24	McClure	Low adjacent fill on south edge of apron (approx. 4"). Also seeded area is covered with granular material. Clean, fill, and reseed.	NF	See Photo		
6	09/25/24	McClure	Erosion control matting product needed above the culverts as per plan on both inlet and outlet ends	NF	See Photo		
7	09/25/24	McClure	Clean fill material out of culverts. Also, clean culverts on Phase 3	NF	See Photo		
8	09/25/24	McClure	Erosion control matting product is needed around culverts, along ditch slope, and along apron slope in areas as shown on plans (see snapshot below). Not needed on east side. Use quantity to place on south side of apron from edge of pavement to ditch bottom. Also place some fill and matting around Phase 3 culverts in areas that are eroding.	NF	See Photo		
9	09/25/24	McClure	Clean and reseal joints on pavement in areas that joint sealant did not hold.	NF	See Photo		
10	09/25/24	McClure	Remove outlet grates on Casey's culverts in ditch at Phase 3 & 4 intersection. Place on shoulder of road for pickup by FBO.	NF			
11	09/25/24	McClure	Fill in area at inlet end of ditch flume with smaller granular material. Intermix it with the larger revetment in the 10' just upstream from the start of the concrete flume. Water is eroding under the flume at this area.	NF	See Photo		

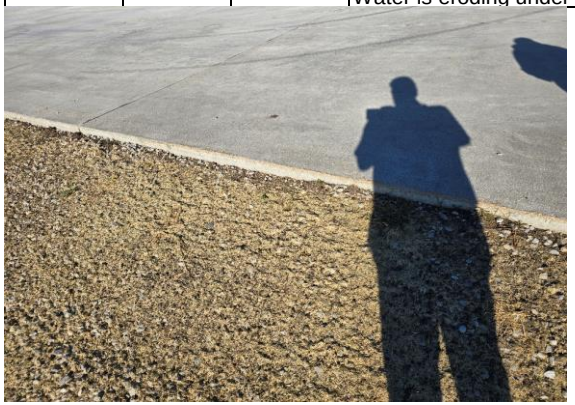

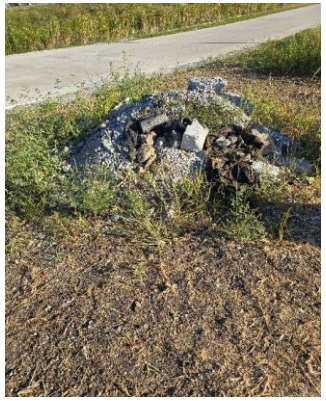

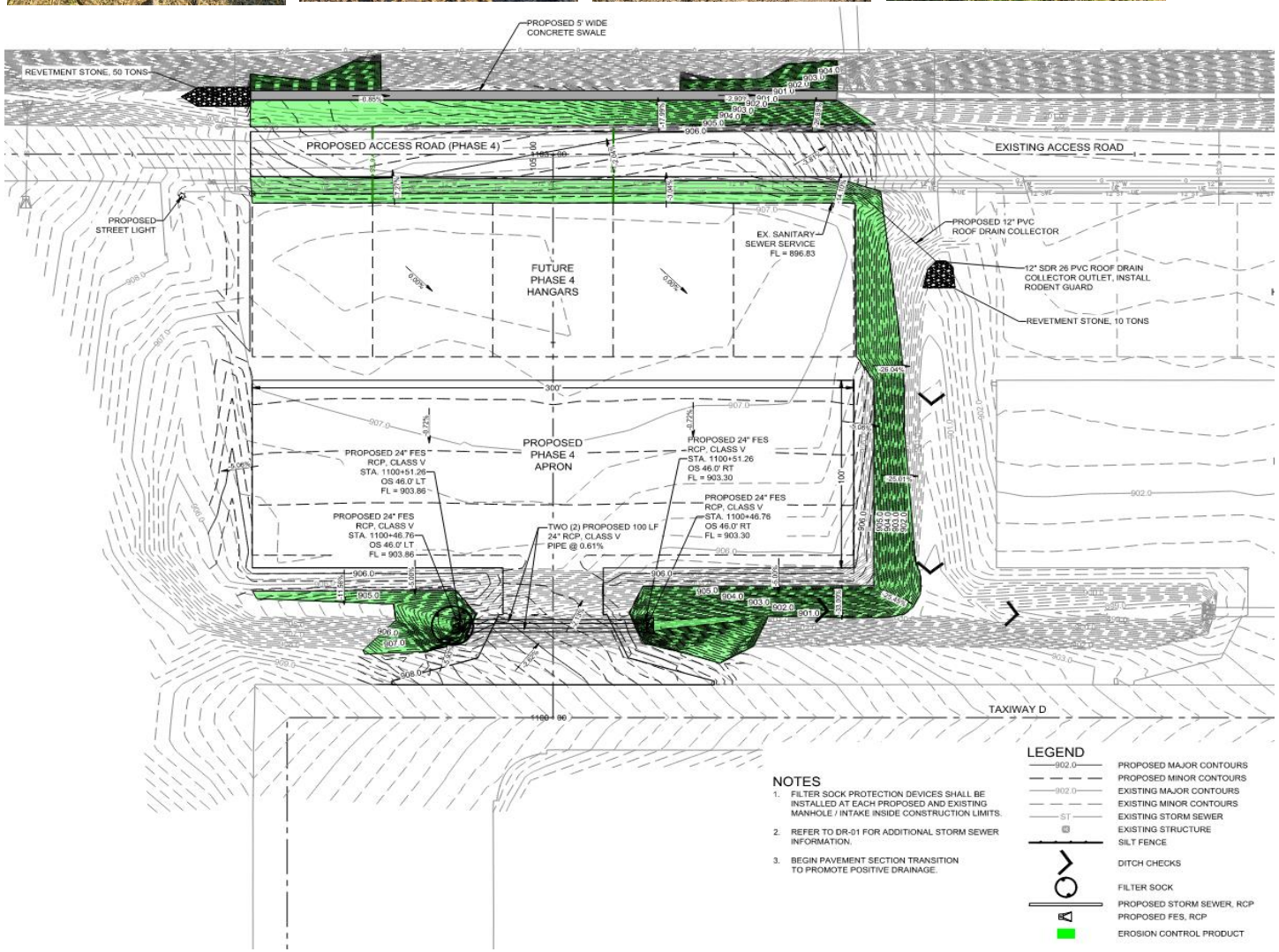

NOTES

1. FILTER SOCK PROTECTION DEVICES SHALL BE INSTALLED AT EACH PROPOSED AND EXISTING MANHOLE / INTAKE INSIDE CONSTRUCTION LIMITS.
2. REFER TO DR-01 FOR ADDITIONAL STORM SEWER INFORMATION.
3. BEGIN PAVEMENT SECTION TRANSITION TO PROMOTE POSITIVE DRAINAGE.

LEGEND

- 902.0 — PROPOSED MAJOR CONTOURS
- PROPOSED MINOR CONTOURS
- 902.0 — EXISTING MAJOR CONTOURS
- EXISTING MINOR CONTOURS
- ST — EXISTING STORM SEWER
- EXISTING STRUCTURE
- SILT FENCE
- DITCH CHECKS
- FILTER SOCK
- PROPOSED STORM SEWER, RCP
- PROPOSED FES, RCP
- EROSION CONTROL PRODUCT

Controlled Access of The Midwest, LLC
5606 NE 12th Ave.
Pleasant Hill, IA 50327
(515)244-4834
info@controlmidwest.com
www.controlmidwest.com

Invoice

BILL TO	SHIP TO
POLK COUNTY AVIATION 3701 SE CONVENIENCE BLVD ANKENY, IA 50021	POLK COUNTY AVIATION ANKENY AIRPORT 3700 SE CONVENIENCE BLVD ANKENY, IA 50021

INVOICE #	DATE	TOTAL DUE	DUE DATE	TERMS	ENCLOSED
23317	09/04/2024	$2,083.96	10/01/2024	DUE ON RECEIPT	

SHIP DATE
09/01/2024

ACTIVITY	DESCRIPTION	QTY	RATE	AMOUNT
	PROTECTION PLAN - QUARTERLY MAINTENANCE AGREEMENT- UP TO THREE GATE OPERATORS			0.00
PROTECTION PLAN	PROTECTION PLAN : 09-01-2024 THROUGH 08/31/2025	1	1,966.00	1,966.00T
	QUARTERLY, OUR SERVICE TECHNICIANS WILL PERFORM RECOMMENDED PREVENTATIVE MAINTENANCE ON YOUR GATE OPERATOR SYSTEM IN AN EFFORT TO PREVENT PROBLEMS OR INTERRUPTIONS. PLEASE NOTE - THIS AGREEMENT COVERS THE PREVENTATIVE MAINTENANCE & UP TO 1 FREE SERVICE CALL PER QUARTER IF NEEDED. ONCE THE WARRANTY HAS EXPIRED ON YOUR GATE SYSTEM, ANY SERVICE CALLS** THAT MAY INCLUDE PARTS OR REPAIRS THAT WOULD BE NEEDED ON THIS GATE SYSTEM IN THE FUTURE MAY INCUR ADDITIONAL CHARGES.			0.00
	DURING OUR PREVENTATIVE MAINTENANCE VISIT WE INSPECT THE FOLLOWING ITEMS, IF APPLICABLE: DRIVE BELT/CHAIN, INTERIOR AND EXTERIOR, GEAR BOX, LOOPS, TIMER, SAFETY DEVICES AND BATTERIES INCLUDE EXAMPLES OF WHAT WE WILL BE CHECKING.			0.00
	MUCH LIKE GETTING AN OIL CHANGE IN YOUR CAR, IT IS IMPORTANT TO THE FUNCTIONALITY OF YOUR GATE SYSTEM TO HAVE REGULAR MAINTENANCE PERFORMED. THIS DOES NOT MEAN THAT THINGS WON'T FAIL BUT IT GIVES US A BETTER OPPORTUNITY AT CATCHING THOSE THINGS BEFORE THEY BECOME AN ISSUE.			0.00

Any equipment either in stock or on-site that is returned because of customer breach of contract will incur a 25% restocking fee on any and all equipment. (NO EXCEPTIONS)

ACTIVITY	DESCRIPTION	QTY	RATE	AMOUNT
	WE ARE RESPONSIBLE FOR:			0.00
	1. SCHEDULING YOUR SEASONAL GATE OPERATOR PREVENTATIVE MAINTENANCE 2. COMPLETING DETAILED CHECKLIST OF GATE SYSTEM 3. EMAILING CUSTOMER A DETAILED CHECKLIST ONCE MAINTENANCE HAS BEEN COMPLETED 4. IMMEDIATELY NOTIFYING CUSTOMER OF ANY CONCERNS/ISSUES LISTED ON MAINTENANCE CHECKLIST 5. PROVIDING CUSTOMER WITH REPAIR PARTS PRICING, IF REQUESTED 6. ORDERING PARTS AND COORDINATING REPAIRS, IF OK'D			
				0.00
	PROTECTION PLAN LOCATION			0.00
	CUSTOMER NAME:			0.00
	EQUIPMENT LOCATION:			0.00
	TERMS OF AGREEMENT: 12 MONTHS			0.00
	MONTHLY INVESTMENT: $164/MONTH OR $1,966/YEAR (PLUS TAX- IF APPLICABLE) - COVERS UP TO THREE GATE OPERATORS			0.00
	DUE UPON INVOICING - BILLED ANNUALLY			0.00
	PROTECTION PLAN AGREEMENT THE SPECIFICATIONS, CONDITIONS, PRICES, SALES AND SERVICE AGREEMENT (ATTACHED) PRESENTED IN THIS PROPOSAL ARE ACCEPTED AS INDICATED BY THE SIGNATURES BELOW. CONTROLLED ACCESS OF THE MIDWEST, LLC IS AUTHORIZED TO PERFORM THE MAINTENANCE SERVICES AS SPECIFIED WITHIN THIS AGREEMENT, WITH PAYMENT MADE AS OUTLINED IN THIS DOCUMENT.			0.00
				0.00
	EMAIL ADDRESS:			0.00
	_____			0.00
	**SERVICE CALL FEE - OUR METRO AREA SERVICE CALL FEE STARTS AT $297 PLUS TAX, WHICH INCLUDES TWO HOURS ON-SITE WITH TECHNICIAN TROUBLESHOOTING AND DIAGNOSING THE ISSUE. IF THE SERVICE CALL EXCEEDS TWO HOURS OR REQUIRES ADDITIONAL TRIPS ADDITIONAL CHARGES WILL APPLY.			0.00

SUBTOTAL	1,966.00
TAX	117.96
TOTAL	2,083.96
BALANCE DUE	**$2,083.96**

Any equipment either in stock or on-site that is returned because of customer breach of contract will incur a 25% restocking fee on any and all equipment. (NO EXCEPTIONS)